MBARS – Mica Backscattering Spectrometer

MBARS is a backscattering spectrometer optimized for small samples and very high energy resolution, ≈ 200 neV (FWHM), operating at an elastic neutron wavelength of 20 Å. It is designed for quasielastic neutron scattering (QENS) studies with motions an order of magnitude slower and at a minimum Q three times smaller than the first target station backscattering spectrometer, BaSiS. Like BaSiS, it will provide a unique combination of high energy resolution and large dynamic range. Data from a 10% scatterer will be collected in 3 – 10 hours depending on the degree of Q-partitioning desired.

Science Drivers

Inelastic neutron scattering is the only experimental technique that probes not only the time, but also the spatial characteristics of microscopic dynamics on the highly relevant nanometer length scale, through the Q-dependence of the inelastic and quasielastic spectra. As such, this technique is uniquely suited for comparison with and validation of molecular dynamics simulations. The success of BASIS has demonstrated the preference by the scientific community for a combination of high energy resolution and a broad accessible range of energy transfer (dynamic range) for studying microscopic relaxation dynamics. MBARS will measure slow dynamics including diffusion (local and long-range) and molecular re-orientations across a range of science topics including:

- Protein-solvent coupling. Protein function is strongly affected by interaction with surrounding solvent molecules that exhibit a complex range of dynamics, typically explored as a function of sample temperature. Numerous unresolved controversies in the field largely stem from the energy resolution limitations of present day neutron backscattering spectrometers. An order of magnitude improvement in energy resolution will enable unambiguous characterization of the true dynamic properties.
- Ion diffusion in energy materials. QENS can provide detailed picture of ion diffusion in host structures, yielding information such as the diffusion jump length and the residence time between the successive jumps. BaSiS has already demonstrated the potential to measure lithium diffusion in battery component materials, but has been limited to high temperature measurements where the instrument resolution can resolve the QENS broadening. Order of magnitude improvement in resolution will enable QENS studies of lithium diffusion under realistic conditions (ambient and slightly below ambient temperature).
- Complex biological and soft matter systems where sample size is an issue. Access to lower Q values and longer relaxation times (to probe larger structural units involved in slower motions) is needed for studying more complex biological and soft matter systems. At the same time, many biological samples are difficult or impossible to synthesize in quantities sufficient to use the traditional (about 10 cm^2) neutron beam cross-section available at backscattering spectrometers.

Science Requirements

MBARS is designed to address these challenges by providing

1. Energy resolution: 200 neV (FWHM)
2. Q-range: $0.06\ Å^{-1} \leq Q \leq 0.6\ Å^{-1}$
3. Sample size 0.5 x 0.5 cm^2

Technical Requirements

MBARS requires sharp neutron pulses at a low-repetition rate; therefore, it is ideally matched to a high timing resolution (de-coupled) cold moderator at the 10 Hz repetition rate STS. This concept is nearly identical to an early proposal[1] (see figure below) but proposes an innovative means to filter out high-order contamination from the analyzer crystals using a novel device, the Wide-Angle Velocity Selector (WAVES), under development at ORNL.[2]

This instrument will view the cold, para-hydrogen 7×7 cm^2 face of the multi-spectral decoupled moderator. The neutron guide will be curved to avoid line-of-sight of the moderator and reduce the background from prompt neutrons and gammas. The analyzer will be synthetic fluorophlogopite with a 0.3° mosaic (FWHM) in near-backscattering geometry covering a solid angle of 3.7 ster. The neutron guide will deliver at least ±3° of beam divergence in the horizontal direction (higher is acceptable). Divergence in the vertical direction may be limited by use of the WAVES device but will be at least ±0.5°. The beam line will incorporate one or maybe two bandwidth choppers (if sharper open/close transition is required). The table below lists key parameters of MBARS.

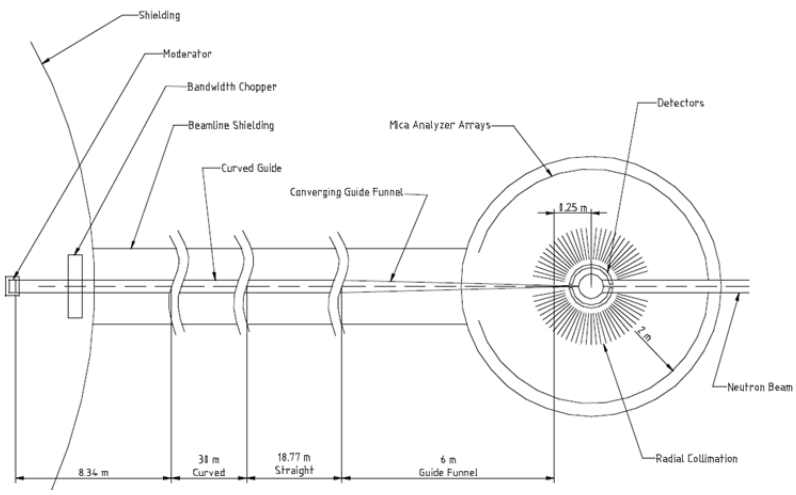

Key parameters of MBARS

Parameter	Description
Moderator	Multi-spectral decoupled moderator —cold
Sample size	5×5 mm^2
Moderator–sample distance	75 m
Sample–analyzer distance	2 m
Analyzer–detector distance	1.75 m
Wavelength range	17.9 Å ≤ λ ≤ 23.1 Å
Q-range	0.06 $Å^{-1}$ ≤ Q ≤ 0.6 $Å^{-1}$
ω-range	- 51 μeV ≤ ω ≤ 51 μeV
Resolution	200 neV (FWHM) at the elastic peak
Detector	0.8 cm diameter linear position-sensitive detector, ^3He

[1]H. N. Bordallo, et al., Nucl. Instrum. Meth. A 491, 216–225 (2002).

[2]E. Mamontov, Nucl. Instrum. Meth. A, 759, 83–91 (2014).