TERRESTRIAL ENERGY

Vision: to change the way the world thinks about nuclear energy

Mission: To commercialize a strategic and carbon-free energy technology for global industry

October 2015

The Integral Molten Salt Reactor

October 15th, 2015

Workshop on Molten Salt Reactor Technologies

DISCLAIMERS

This presentation may contain "forward-looking information" as such term is defined under applicable Canadian securities laws. Forward-looking information is disclosure regarding possible events, conditions or results of operations that is based on assumptions about future economic conditions and courses of action and may include future-oriented financial information ("FOFI") and information presented in the form of a "financial outlook" with respect to prospective results of operations, financial position or cash flows that is presented either as a forecast or a projection.

Investors are advised that forward-looking information is subject to a variety of risks, uncertainties and other factors that could cause actual results to differ materially from expectations as expressed or implied within this presentation. Forward-looking information reflects current expectations with respect to current events and is not a guarantee of future performance. Any forward-looking information that may be included or incorporated by reference in this presentation, including any FOFI or a "financial outlook", is presented solely for the purpose of conveying the current anticipated expectations of management and may not be appropriate for any other purposes. Investors are therefore cautioned not to place undue reliance on any such forward-looking information and are advised that the company is not under any obligation to update such information, other than as may be required under applicable securities laws and/or as agreed to in contract.

TECHNOLOGY

LIQUID FUEL

- **Liquid fuel form is foundation of most MSR advantages**
- **Solid fuel is a complex challenge**
  - Slightest change to solid fuel means years of testing
  - Irradiation damage limits burn up
  - Decay heat removal means coolant must continue in every foreseeable circumstance
- **Liquid Fluoride Fuel Salts**
  - Fuel unaffected by radiation, simplifies fuel qualification
  - Fuel is the coolant, Decay Heat removal by convection possible
  - Low pressure and very high boiling point
- **Many Liquid Fuels examined in 1950s and 60s. Only Fluoride Salts proved practical**

WHY THE RENEWED INTEREST IN MSR'S IN GENERAL?

- **Only incremental improvements possible for LWR technology**
- **Passive safety of MSRs opens possibility of true cost innovation**
- **MSRs have reduced waste profile and can consume existing waste**
- **Can be configured as factory fabricated, Small Modular Reactors**
- **While "novel and new" is attractive, can lead to decades of development. Stick to demonstrated technology where possible**
- **Logical to first examine the "textbook" 1970s Molten Salt Breeder Reactor concept…**

CHALLENGES OF 1970'S MSR-BREEDER DESIGN

- **Online Fission Product Removal**
- **Tritium Control**
- **Reactivity Temperature Coefficients (only weakly negative)**
- **Use of Highly Enriched Uranium**
- **Long Term Corrosion or Radiation Damage**
- **Graphite Replacement Operations**

WHY GRAPHITE?

- **Graphite use does present challenges**
- **Disposal Issues**
  - Largely a “perception” issue but still of importance
  - Both ^{14}C and ^{36}Cl issues can be largely avoided by modifying graphite production
- **Adds chemical potential**
  - In fact however, almost no added safety concerns
  - No Weigner energy as used at high temperatures
  - Graphite near impossible to burn
  - Windscale fire was fuel and aluminum cladding burning, Chernobyl was 2000 C+ Corium driving reactions

WHY GRAPHITE?

- **Only unclad moderator possible**
- **Graphite use enables protection of all structural metal (vessel walls etc) from high neutron fluence by use of "undermoderated" outer zones**
- **More thermal spectrum aids reactor control**
- **Makes power output truly scalable from large to small**
- **Massive reduction in fissile concentration and starting loads**
- **As low as 1% enrichment possible and 1.5% to 4% practical**

WHY BREEDERS?

- **We now know that Uranium is quite abundant, must ask is there a strong need for the breeder approach?**
- **A MSR-Burner can be many times more efficient on Uranium than current LWRs. A truly "Sustainable" option for at least hundreds of years.**
- **MSR-Burner approach of running off Low Enriched Uranium solves many development challenges**
- **The last major work of ORNL in the late 1970s was an MSR-Burner, the Denatured Molten Salt Reactor (DMSR)**

ISSUES SOLVED BY THE MSR-BURNER APPROACH

- **Fission product removal**
  - No need for any on site processing
- **Tritium Control**
  - Inexpensive carrier salts can be used to curtail tritium production (no ^{7}Li or Be)
- **Reactivity Coefficients**
  - MSR-Burners have far superior reactivity coefficients
- **Proliferation**
  - Uranium always denatured, Pu content has high 240 and 242 content and never separated even if fuel salt recycled

REMAINING CHALLENGES ARE MATERIAL RELATED

- **Long Term Corrosion or Radiation Damage**
  - High Nickel alloys perform superbly but proving a 30 to 60 year lifetime will be a challenge
- **Graphite Replacement**
  - Graphite use gives very strong advantages
  - Its lifetime however is limited by power density

DESIGN CHOICES - ***SEAL OR SWAP?***

- **Graphite has limited lifetime if power density is high**
- **Does one Seal the reactor for the plant lifetime or go to high power density and plan for graphite replacement?**
- **Early ORNL work chose 4 year Swap**
- **Graphite swapping far more difficult than many assume**
- **Later ORNL work chose a low power density to keep the reactor sealed**
  - Higher capital and fuel costs (larger core = more startup fuel salt)

WHAT IS TERRESTRIAL ENERGY'S IMSR?

Integral Molten Salt Reactor

- **LEU fueled MSR-Burner design like the 1980 DMSR**
- **Integrates all primary systems into a sealed reactor vessel**
- **Planned in 80 MWth, 300 MWth and 600 MWth sizes**
- **Off the shelf Steam Turbines**
- **Small Modular, factory fabrication**
- **Passive decay heat removal *in situ* without dump tanks**
- **Safety at forefront which leads to cost innovation**

IMSR'S SEAL AND SWAP APPROACH

- **The IMSR primary vessel is a permanently sealed system**
- **Economically high power density but less than a 30 year lifetime**
- **After a 7 year design life, an identical IMSR Core-unit replaces the old unit for an indefinitely long plant lifetime**
- **Redundancy of heat exchangers so any failure does not require replacement operations**
- **IMSR = "Sealed for Life" + "Replaceable"**

“2014” IMSR CORE-UNIT

IMSR CORE-UNIT WITHIN BUFFER SALT LINER

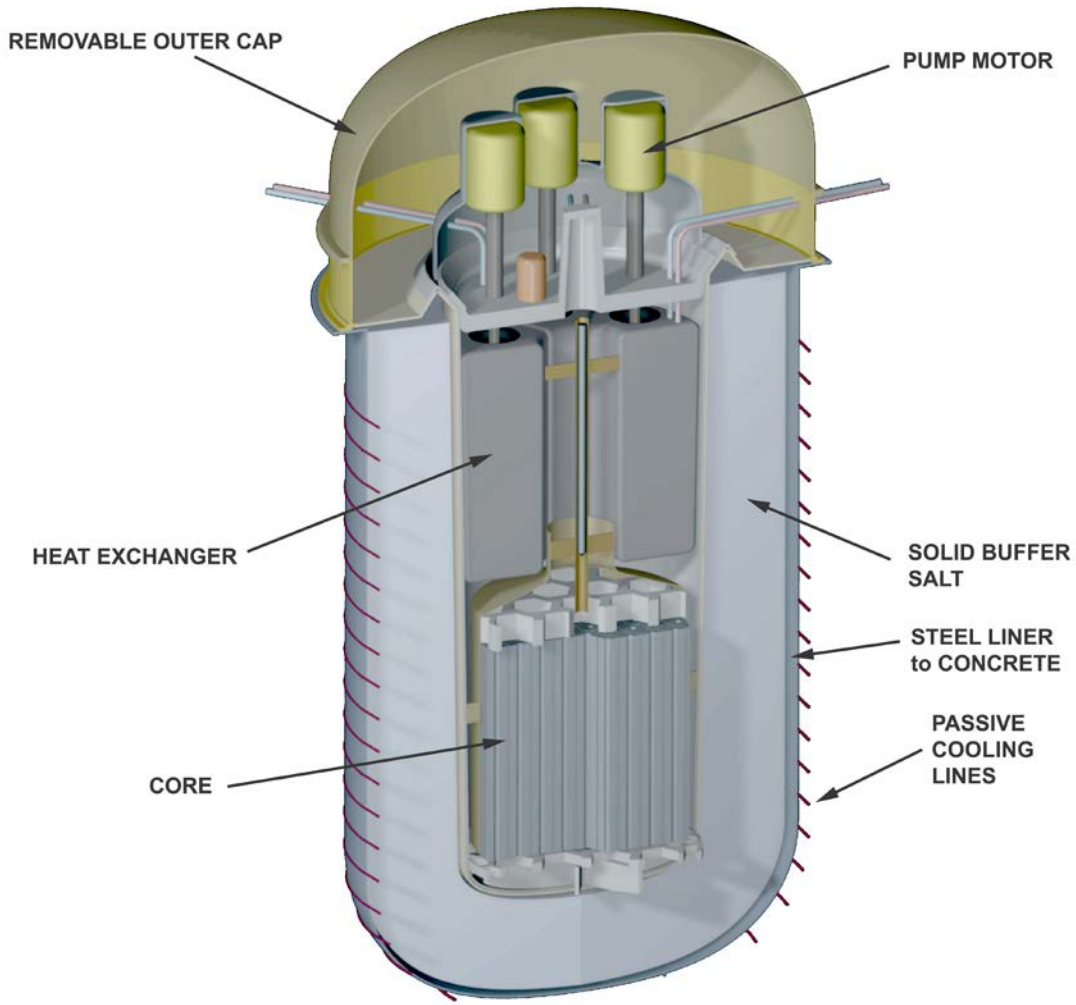

OUTER CONTAINMENT SHELL

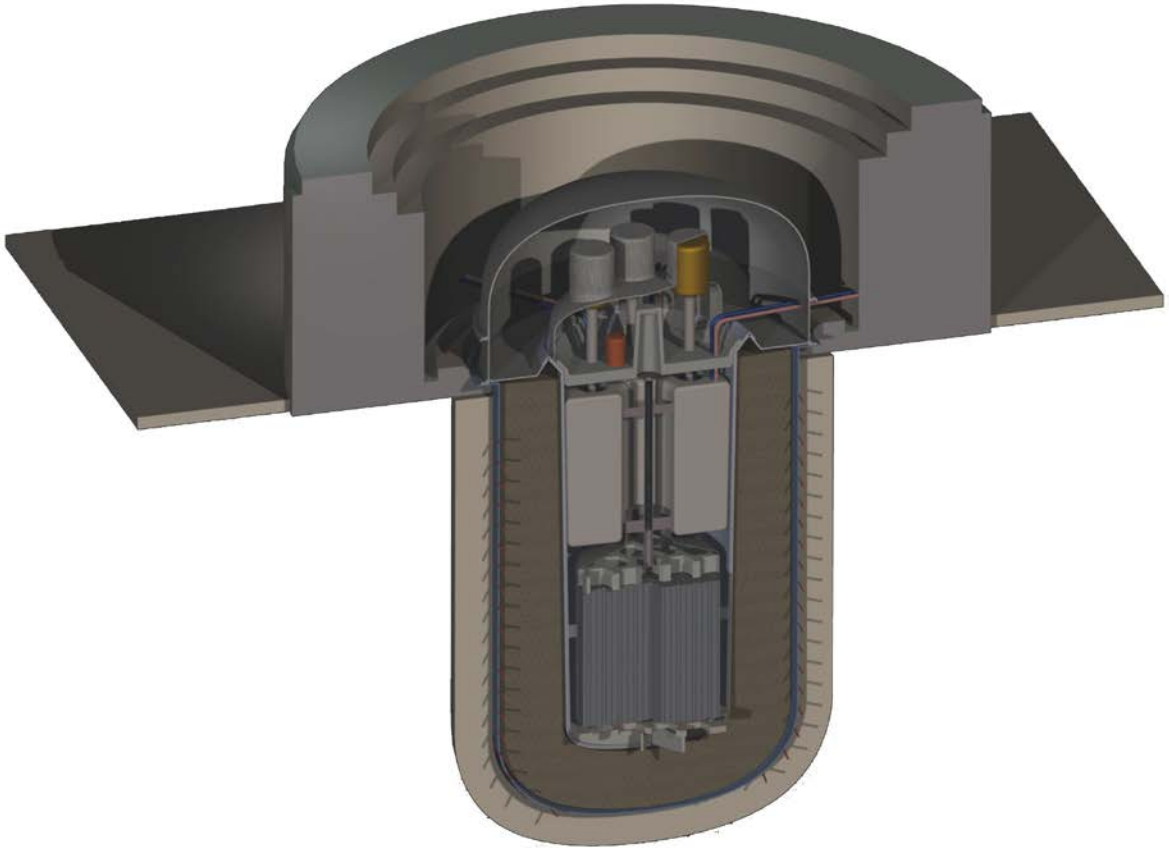

IMSR 80 MWth GENERALIZED FACILITY

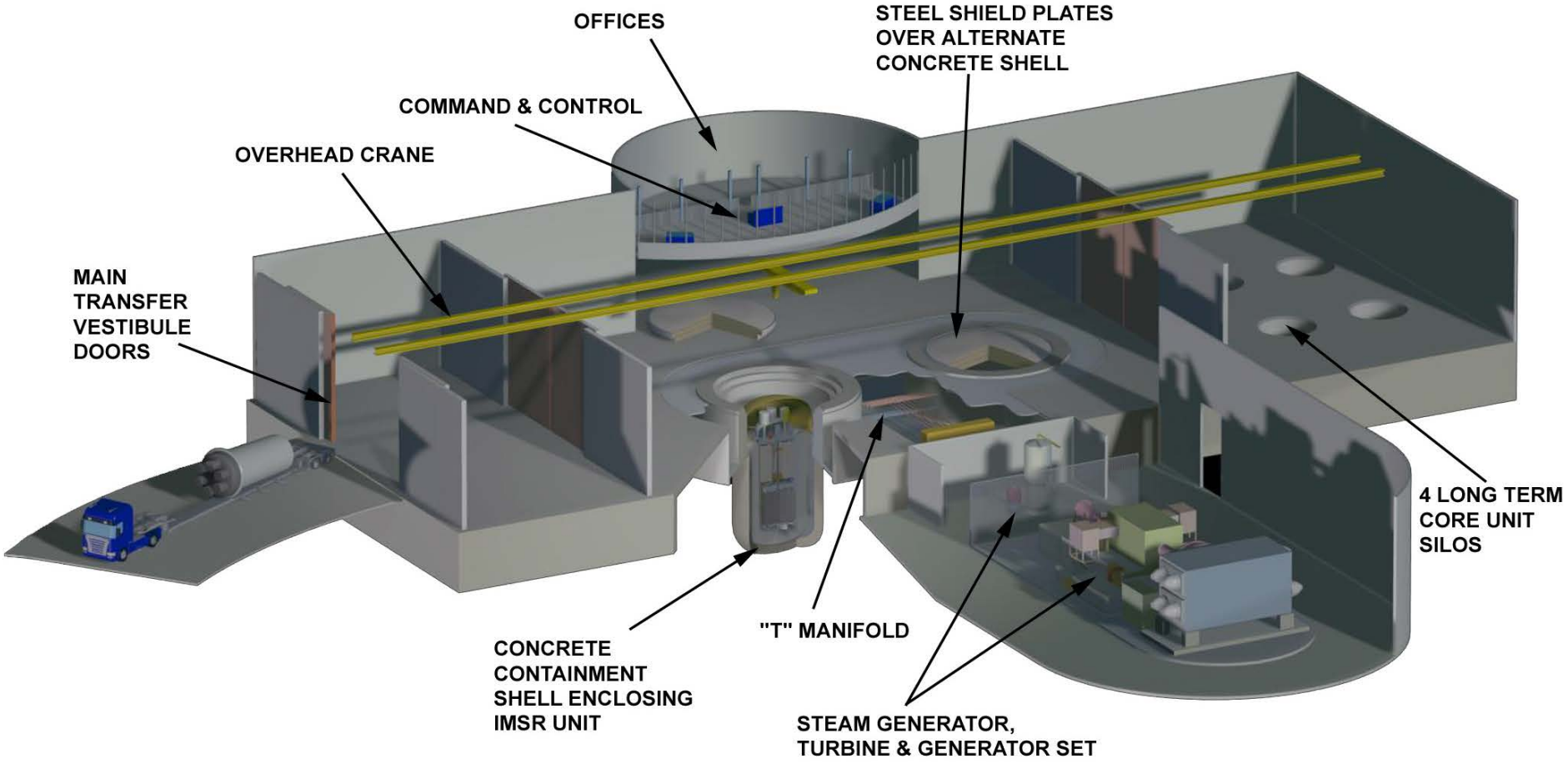

IMSR 80MWth vs 300MWth vs 600MWth

IMSR600 (291 MWe) VERSUS AP600 (600 MWe)

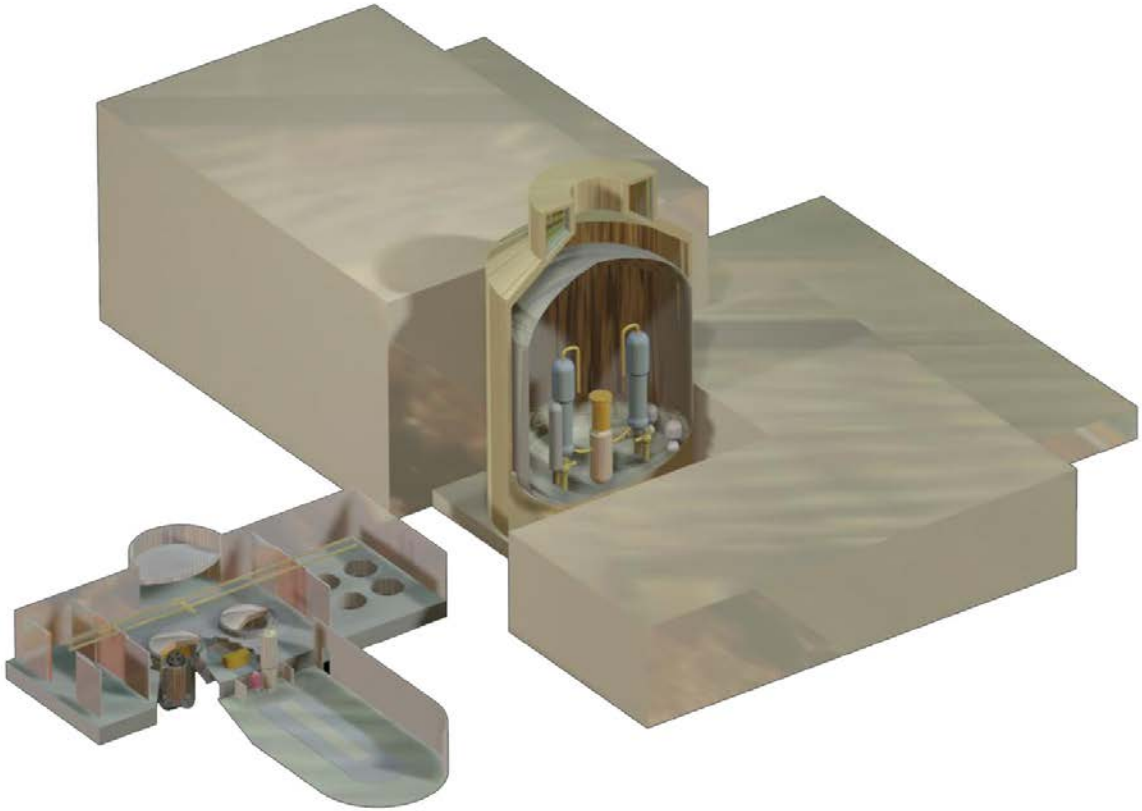

THE IMSR – INNOVATING BETWEEN LAB AND MARKET

Key innovation is the integration of primary reactor components

- Reactor core
- Primary heat exchanger
- Pumps

..into a sealed reactor vessel within a compact and replaceable unit

- For a 7 year operational life

This integrated design promises high industrial value through

- Inherent safety
- Operational simplicity
- Cost innovation

Patent applications filed on key innovations

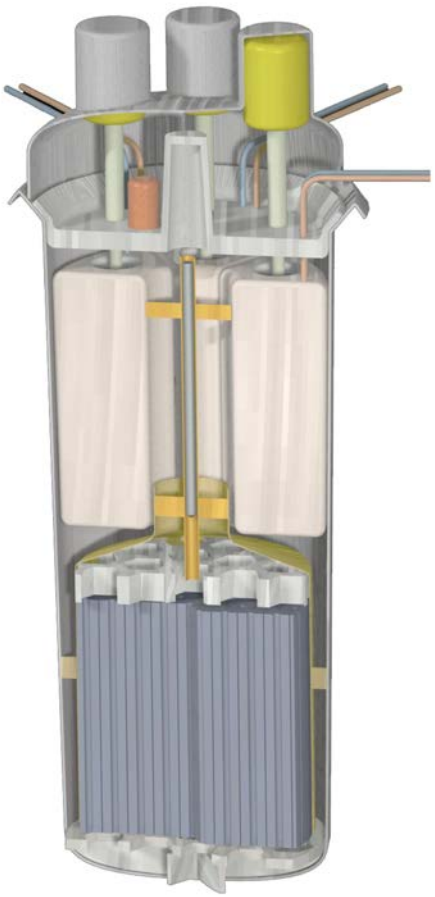

BUSINESS

TERRESTRIAL ENERGY

- **Commercializing proprietary Molten Salt Reactor technology**
  - Plans to build and license a commercial IMSR by mid 2020's
- **TEI's team consists of over 30 and growing fast**
- **Completed Phase I of its business plan**
  - Completed IMSR Pre-Conceptual Design Report (PCDR)
- **Commenced Phase II (two years)**
  - Complete detailed design
  - Complete first regulatory phase with Canadian Regulator (CNSC)
  - Complete Pre Feasibility Cost Engineering
- **National lab, university and corporate relationships expanding**

OFFICERS & DIRECTORS

- **Simon Irish – CEO, Director, Co-Founder**
- **David LeBlanc, PhD – CTO, Director, President, Co-Founder**
- **Canon Bryan – CFO, Director, Co-Founder**
- **David Hill, PhD – Director**
- **Hugh MacDiarmid – Chairman, Director**
- **Louis Plowden-Wardlaw – Secretary**

INTERNATIONAL ADVISORY BOARD (1 of 2)

- **Paul Blanchard, PhD – Strategic Communications Consultant**
- **Caterpillar Inc. – Global Industrial Company**
  - Represented by Dan Henderson, Director of Research and Advanced Engineering
- **Thomas Drolet – Former President and CEO of Ontario Hydro International**
- **J. R. (Dick) Engel – Former ORNL scientist with extensive experience of ORNL's operating MSRE**

INTERNATIONAL ADVISORY BOARD (2 of 2)

- **Ray O Johnson, PhD – former CTO of Lockheed Martin**
- **Julian Kelly, PhD – Chief Technology Officer, Thor Energy**
- **Jeffrey Merrifield, JD – Former NRC Commissioner**
  - Legal Counsel to Terrestrial Energy's International Advisory Board
- **James Reinsch – Former President of Bechtel Nuclear**
- **Christine Todd Whitman – Former Head of the US EPA**
- **Nabila Yousef – Former Director of Pickering Engineering**

OUR BIGGEST SURPRISE?
OUR RECEPTION WITHIN THE EXISTING NUCLEAR COMMUNITY

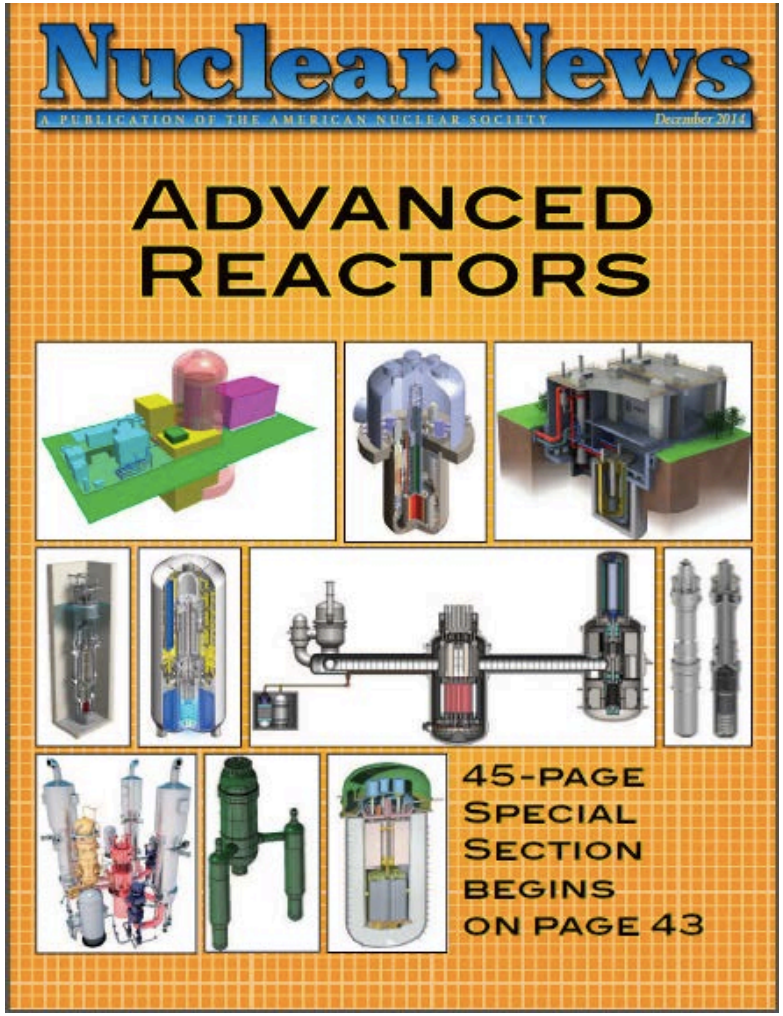

CONTACT DETAILS

2275 Upper Middle Road East Suite 102

Oakville, ON, L6H 0C3

CANADA

Terrestrial Energy Inc.

T: +1 (905) 361-2864

E: info@TerrestrialEnergy.com

www.TerrestrialEnergy.com