UC Berkeley Nuclear Engineering
Thermal Hydraulics Laboratory

UC Berkeley Compact Integral Effects Test (CIET): Facility Design, Test Program, and Initial Validation Studies

Nicolas Zweibaum, Jeffrey Bickel, Zhangpeng Guo, Lakshana Huddar, James Kendrick, Michael Laufer and Per Peterson

Workshop on Molten Salt Reactor Technologies

Oak Ridge National Laboratory

October 15-16, 2015

FHR Fluoride Salt Cooled High Temperature Reactor

NEUP Nuclear Energy University Programs

U.S. Department of Energy

Outline

1. CIET Facility Overview
2. Scaling and Design
3. Research Plan
4. Initial Test Results and Validation Studies
5. Conclusions and Future Work

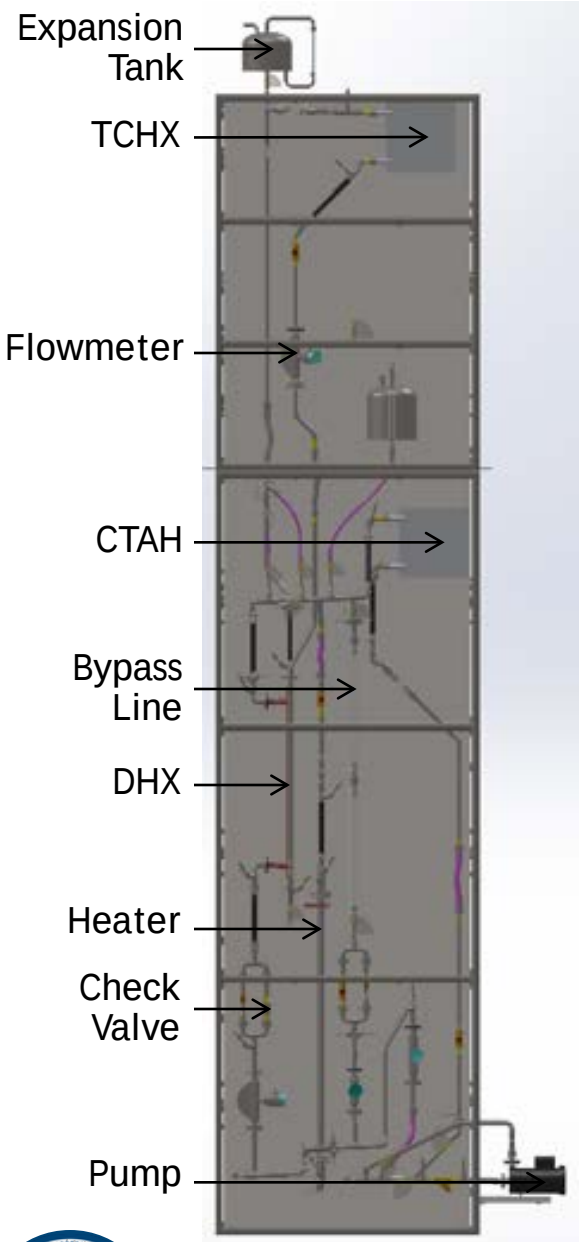

SolidWorks model by AJ Gubser

The CIET Facility

Research objectives:

- Predict the transient thermal hydraulic response of liquid-salt-cooled reactor systems, including integral transient response for forced and natural circulation operation (two coupled loops)
- Use experimental data to validate numerical models

Experimental configuration:

- Coupled square loops (primary and DRACS) with pump, vertical heater, "fluidic diode", heat exchangers
- All branches equipped with needle valves to vary friction factor
- Shell-in-tube oil-to-oil DHX, with modularity to switch to twisted tubes heat exchanger

All CIET research falls under the facility-specific quality assurance program.

The UCB Compact Integral Effects Test (CIET) Facility Scaling Matches the Mk1 Reactor Design

UC Berkeley CIET
(50% Height)

Mk1 Pebble-Bed Fluoride-Salt-Cooled, High-Temperature Reactor
(100% Height)

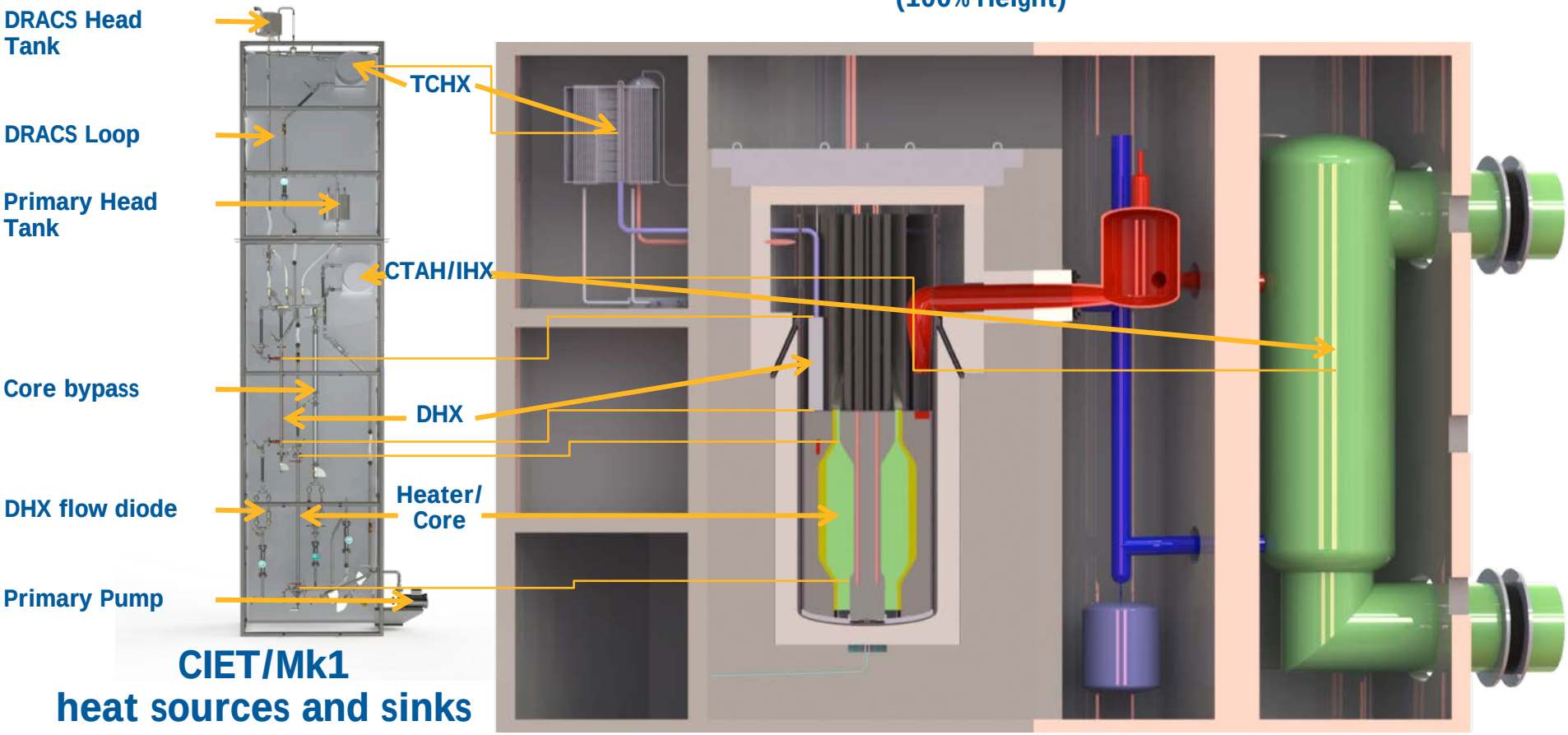

CIET/Mk1 heat sources and sinks

The 10-kW CIET 1.0 resistive heater simulates a prototypical IET with a nominal power of 6.3 MWth operating at 10% of full power.

Research Methodology

Top-down and bottom-up approach:

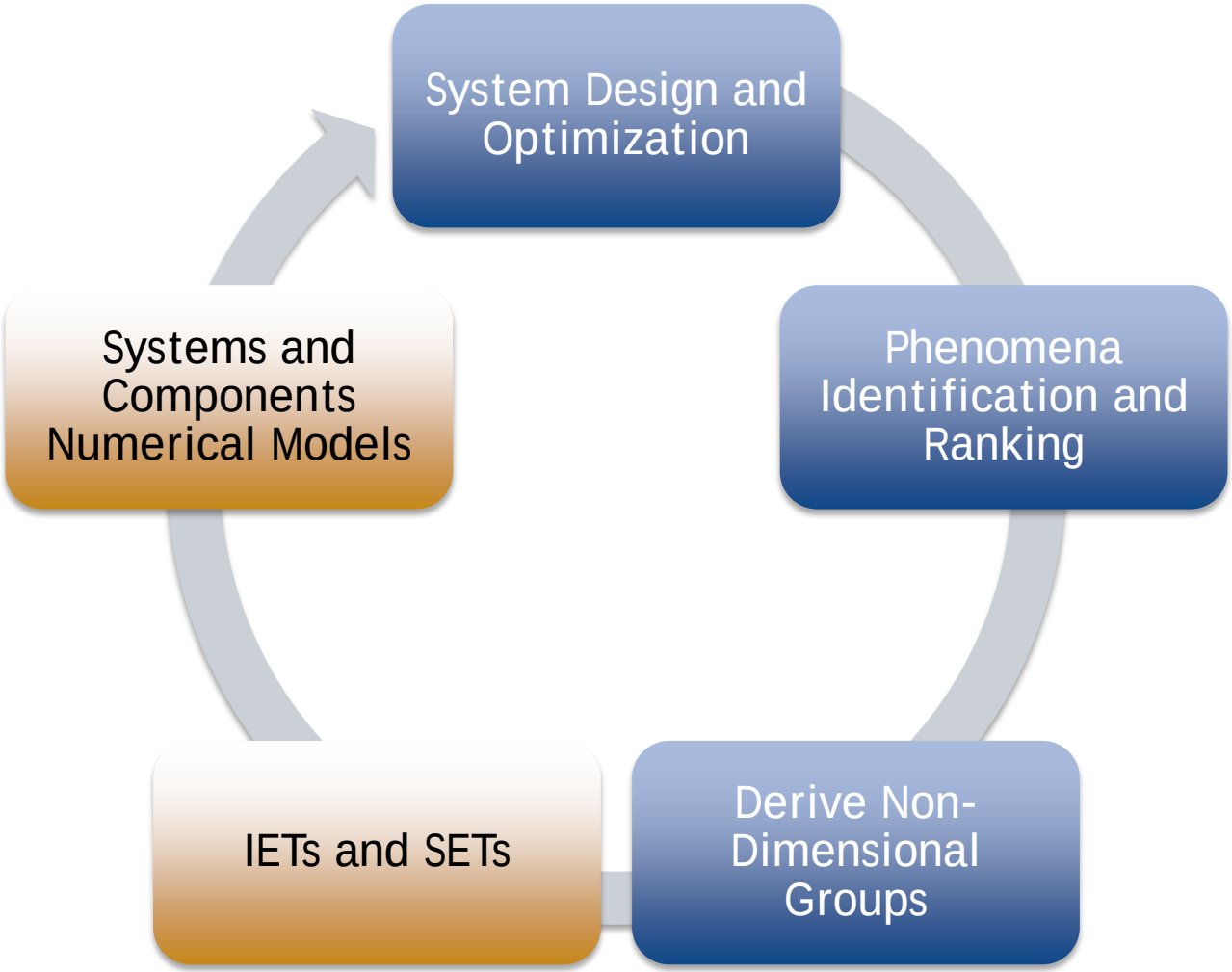

CIET FACILITY SCALING AND DESIGN

The Similitude of Convective Heat Transfer in Oils and Molten Salts was Discovered in 2006

- **Previous scaled experiments with water studied molten salt fluid dynamics**
- **P. Bardet noted that Prandtl number for mineral oil used in matched index of refraction experiments could match that of fluoride salt flibe**
- **Subsequent analysis confirmed ability to match Pr, Re, Gr, and Fr simultaneously**
- **Confirmation of similitude with comparison of results from Scaled High Temperature Heat Transfer (S-HT^2) experiment to 1970s ORNL data**

OPTIONS FOR SCALED EXPERIMENTS FOR HIGH TEMPERATURE LIQUID SALT AND HELIUM FLUID MECHANICS AND CONVECTIVE HEAT TRANSFER

THERMAL HYDRAULICS

KEYWORDS: liquid and molten salts, very high-temperature reactors, scaled experiments

PHILIPPE M. BARDET and PER F. PETERSON*
University of California, Nuclear Engineering Department, Berkeley, California 94720

Received October 11, 2006
Accepted for Publication June 29, 2007

Liquid fluoride salts and helium have desirable properties for use as working fluids for high-temperature (300 to 1000°C) heat transport in fission and fusion applications. This paper presents recent progress in the design and analysis of scaled thermal-hydraulic experiments for fluid mechanics and convective heat transfer in liquid salt and helium systems. It presents a category of heat transfer fluids and a category of light mineral oils that can be used for scaled experiments simulating convective heat transfer in liquid salts. By optimally selecting the length, velocity, average temperature, and temperature difference scales of the experiment, it is possible to simultaneously match the Reynolds, Froude, Prandtl, and Grashof numbers in geometrically scaled experiments operating at low-temperature, reduced length, and velocity scales. Mechanical pumping power and heat input are reduced to—1 to 2% of the prototype power inputs.

Helium fluid mechanics and heat transfer likewise can be simulated by nitrogen following the same procedure. The resulting length, velocity, temperature, and power scales for simulating helium are quite similar to those for the liquid salts, and the pressure scale is reduced greatly compared to the prototypical pressure scale. Steady state and transient heat transfer to a steel and graphite structure can be reproduced with moderate distortion using Pyrex and high-thermal-conductivity epoxies, respectively. Thermal radiation heat transfer cannot be reproduced, so the use of these simulant fluids is limited to those cases where radiation heat transport is small compared to convective heat transport, or where corrections for thermal radiation heat transfer can be introduced in models using convective heat transfer data from the simulant fluids. Likewise for helium flows, compressibility effects are not reproduced.

I. INTRODUCTION

High-pressure helium and liquid fluoride salts are two of the heat transfer fluids being considered for use in the production of hydrogen and electricity in the Generation IV Very High Temperature Reactor (VHTR). This paper presents methods to select simulant fluids and scaling parameters for experiments to reproduce fluid mechanics and heat transfer phenomena for those high-temperature fluids at reduced temperature, pressure, length, and power scales.

Liquid fluoride salts, as pictured in Fig. 1, potentially have large benefits for use in high-temperature heat transport in fission and fusion energy systems because of their very low vapor pressures at high temperatures. Liquid fluoride salts are created using the most electronegative element in existence, fluorine, combined with highly electropositive elements like lithium, sodium, potassium, beryllium, and zirconium, creating highly stable compounds. Excellent corrosion resistance has been demonstrated with high-nickel alloys, graphite, and carbon composites. Liquid salts have a high volumetric heat capacity ρC_p, significantly larger than high-pressure helium and liquid metals (Table I), giving heat transport and pumping power characteristics similar to pressurized water. They have very high boiling temperatures, typically above 1300°C, and relatively high melting temperatures (320 to 500°C), necessitating the use of heat tracing and drain tanks for freezing control. The high chemical inertness and low vapor pressure provide good safety

*E-mail: peterson@nuc.berkeley.edu

Scaling: Integral Effects Tests for FHR Transients Using Dowtherm A Simulant Fluid

Scaling parameters to match average Pr and Gr for flibe and Dowtherm A (Re also matches):

		DRACS, normal operation	DRACS, natural circulation	Primary loop
Flibe Temperature [°C]		543	567	652
Dowtherm A Temperature [°C]		51	59	95
Length scale	L_m/L_p	0.49	0.48	0.45
ΔT scale	$\Delta T_m/\Delta T_p$	0.31	0.31	0.30
Heating power	$P_{q,m}/P_{q,p}$			1.6%

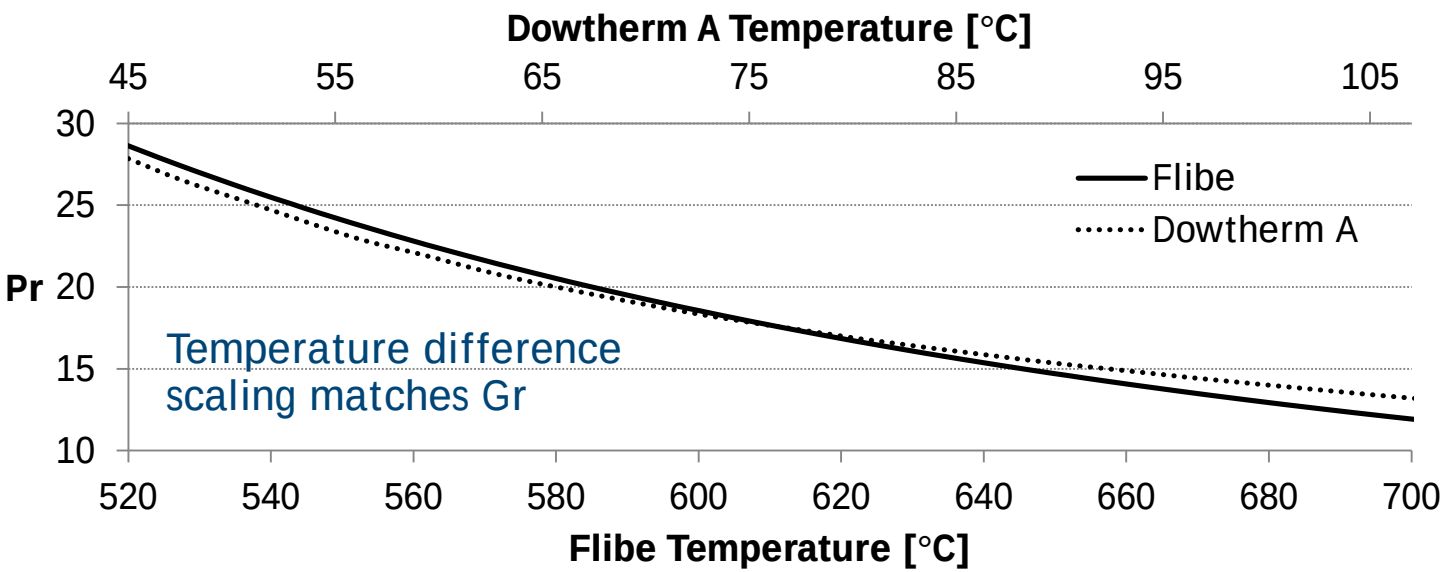

CIET 1.0 Piping and Instrumentation

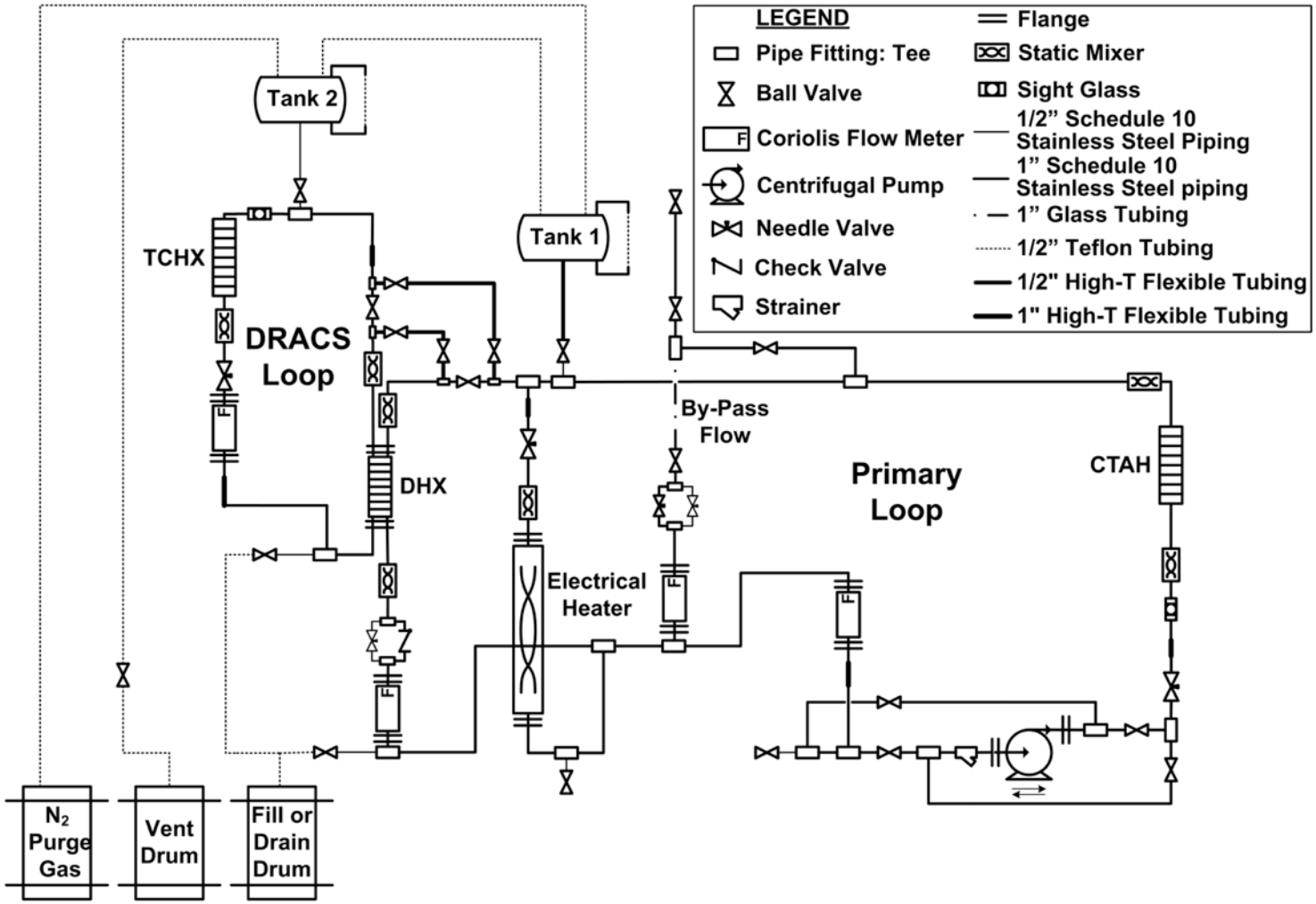

Flow paths in the CIET 1.0 fluid loop, controlled through valve alignments, replicate the primary and DRACS flow paths of the Mk1 PB-FHR.

CIET 1.0 Main Components

- Electrical heater
  - The computer-controlled power supply is designed to supply up to 10 kW of input heat to the fluid
- Air-cooled heat exchangers
  - Two computer-controlled heat exchangers are designed to extract up to 10 kW under forced circulation and 2 kW under natural circulation, or 10% and 2% of scaled reactor full power
- DRACS heat exchanger (DHX)
  - The modular DHX is designed to transfer up to 2 kW with minimal thermal resistance between the primary loop and the DRACS loop
- Flow diode
  - The flow diode in the CIET 1.0 DHX branch is simulated using two valves in parallel (a needle valve and a check valve)
- Instrumentation
  - 47 small-sheath-diameter (0.02”) type-T sheathed thermocouples
  - 16 transparent manometer lines
  - 4 Coriolis flowmeters
  - 1 centralized data acquisition system + LabVIEW software for instrumentation coordination, control of power, pump speed and heat exchanger fan speeds

CIET 1.0 Fabrication

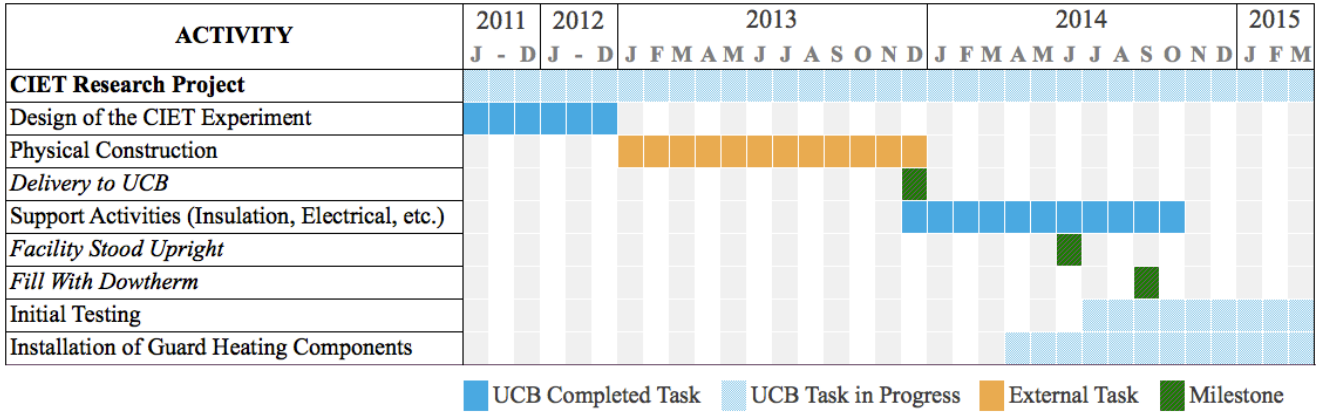

February 2014

March 2014

April 2014

June 2014

The CIET loop was first filled up with Dowtherm A on September 15th, 2014, using a pressurized fill tank.

RESEARCH PLAN

CIET Test Plan

1. Measurement of solid masses and fluid inventory in the loop (focus on major systems for modeling)
2. Isothermal, forced circulation flow around the loop, with pressure data collection to determine friction losses in the system at various flow rates
3. Steady-state single loop/coupled natural circulation in the primary loop and the DRACS loop
4. Thermal transients: startup, shutdown, protected loss of forced cooling (LOFC) and protected loss of heat sink (LOHS)

   - The set of collected data will serve the double purpose of confirming strategies for operation of FHRs, and validating best estimate transient models
   - Can serve as benchmarking thermal hydraulic exercises

INITIAL TEST RESULTS AND VALIDATION STUDIES

Isothermal Tests to Determine Friction Number Correlations

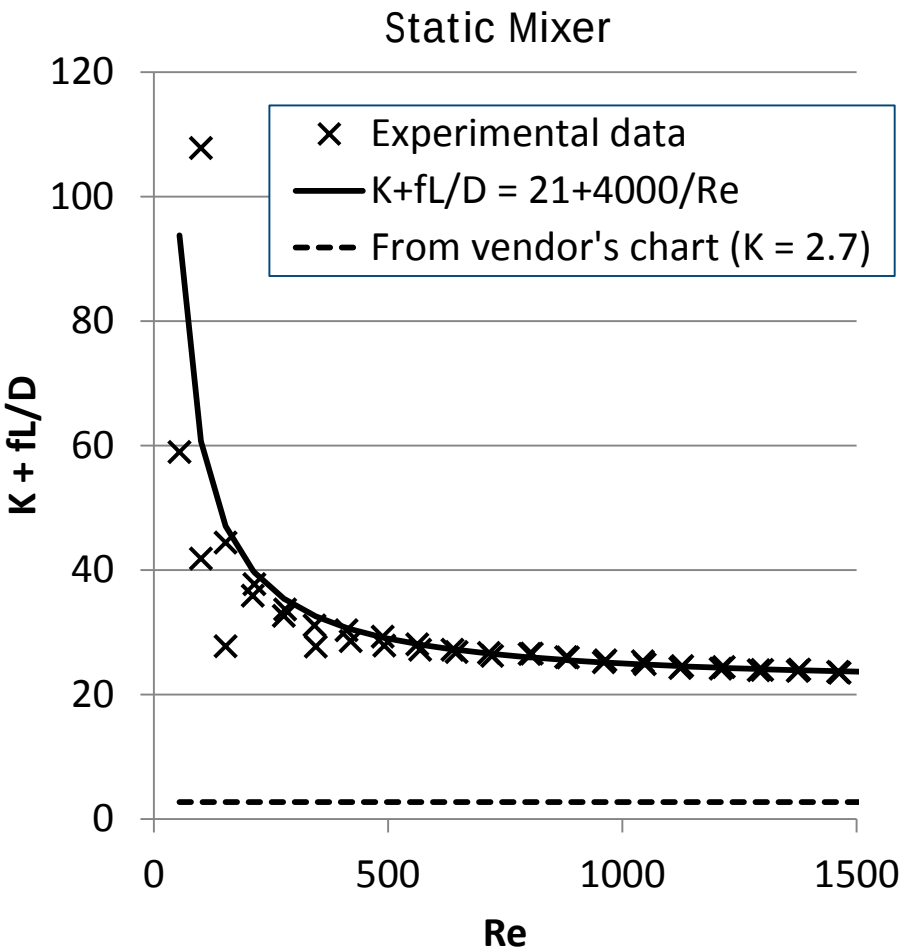

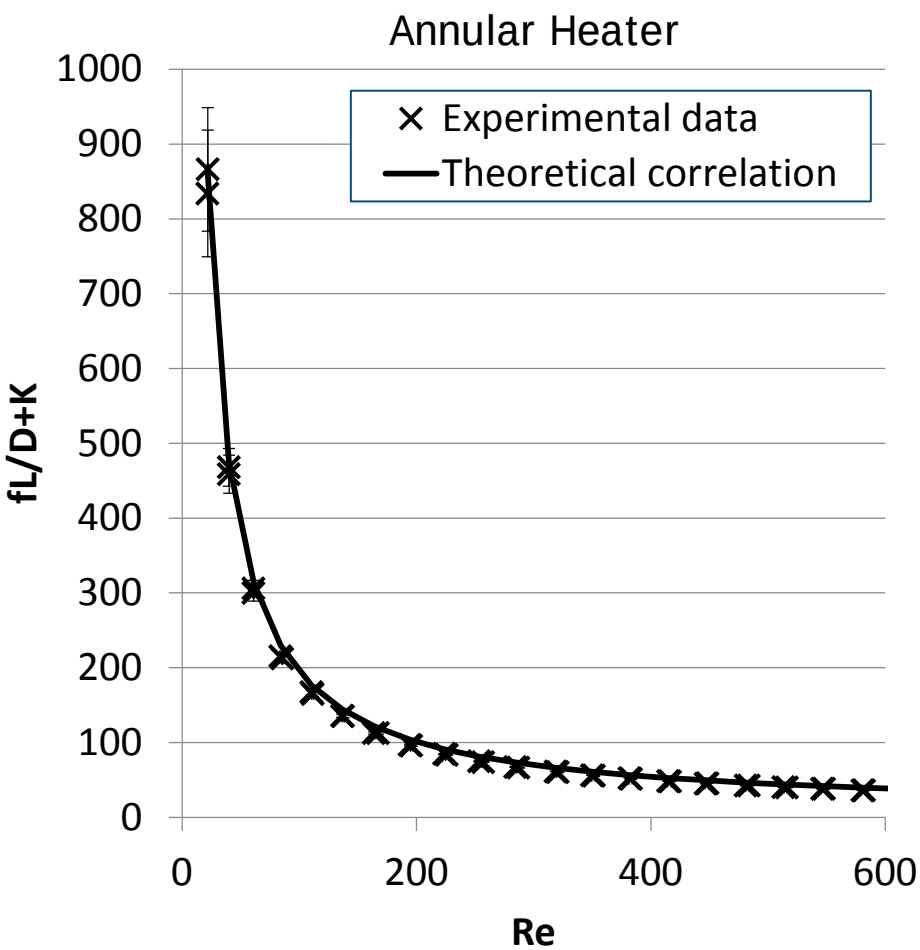

Measured friction losses are significantly higher than vendor's chart.

Matched theoretical and experimental results confirm that as-built geometry matches design.

Initial Heated Tests

- **Parasitic heat loss tests**
  - **Local heat losses calculated from individual sections of the loop, and thermal insulation enhanced in locations with high parasitic heat losses**
  - **Heat losses reduced by adding thermal insulation, with help of infrared camera to locate major parasitic loss regions**
- **Heat exchanger control trials**

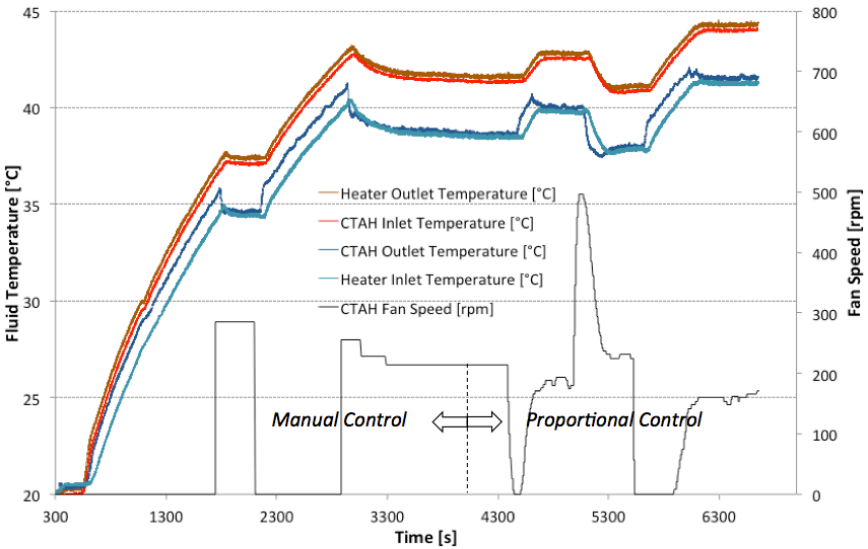

- **Steady state single loop and coupled loops natural circulation for validation studies with system codes**

Comparison of Experimental, RELAP5-3D, FANCY and Analytical Natural Circulation Mass Flow Rates

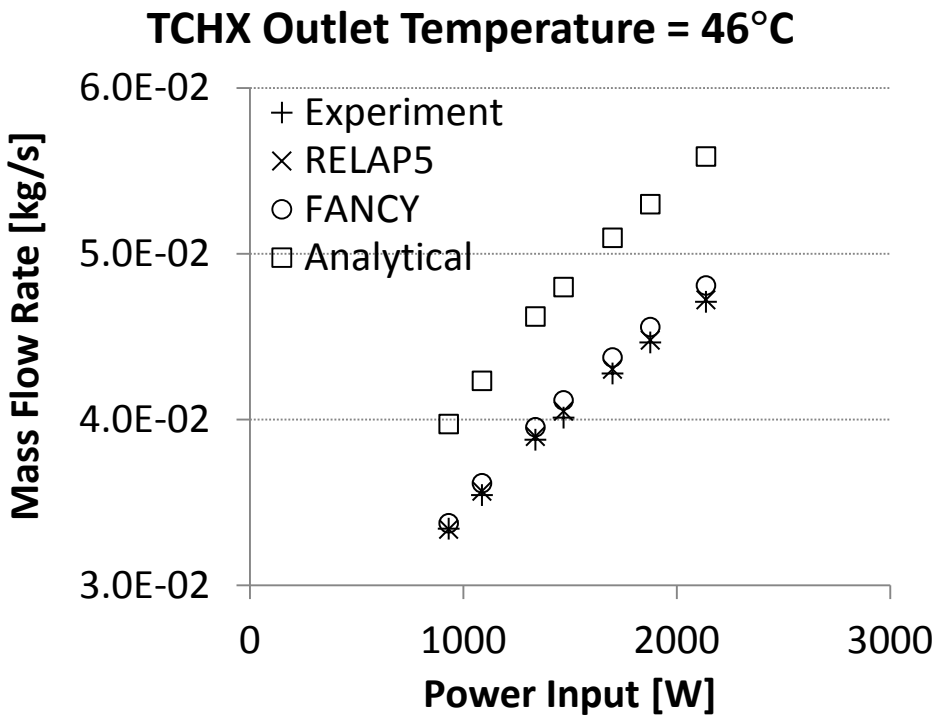

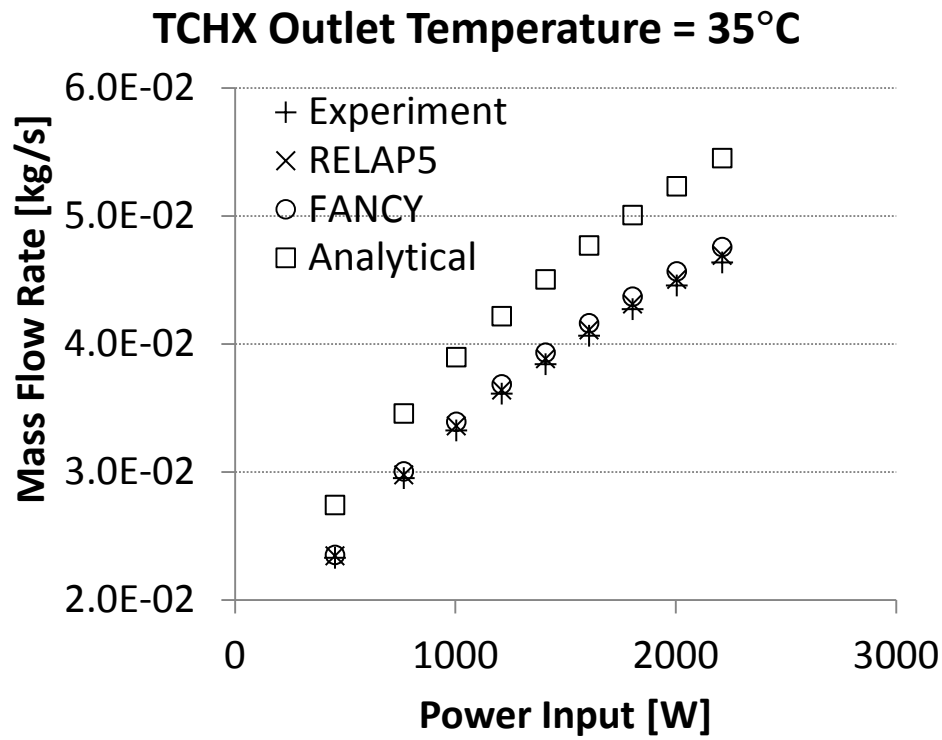

- The agreement between RELAP5-3D and experimental data is within 1% and the agreement between FANCY and experimental data is within 3%
- Analytical solutions overestimate natural circulation mass flow rates in the DRACS loop by ~18% because of parasitic heat losses in the loop, properly taken into account by the models

Comparison of Experimental Data and RELAP5-3D Results for Transient Forced Cooling in the CTAH Loop

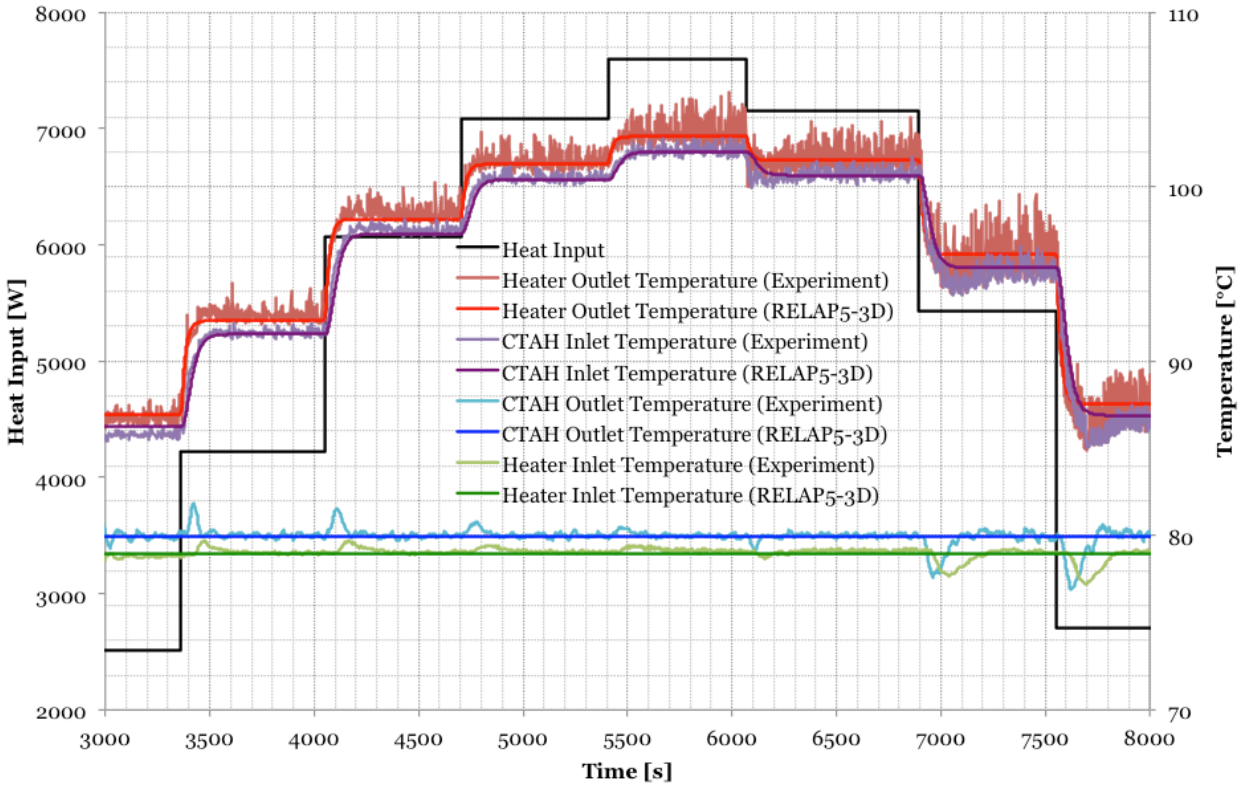

- Forced cooling model validation using heat input step changes, a fixed coolant mass flow rate of 0.18 kg/s in the CTAH loop and a controlled CTAH outlet temperature of 80° C
- The agreement between RELAP5-3D results and experimental data is within 2° C
- Importance of accurately measuring thermal mass of solid structures around the loop to obtain reasonable model results

Preliminary Protected LOFC Transient Results

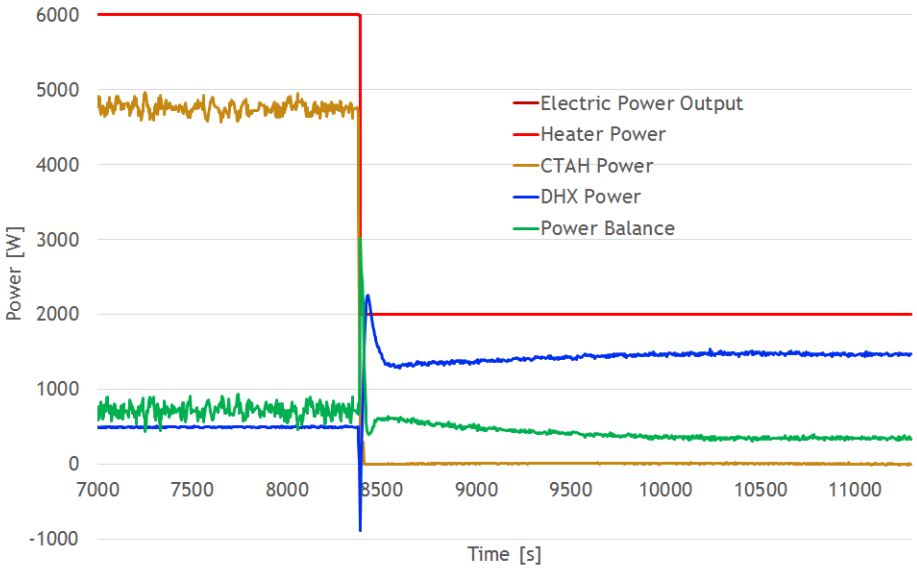

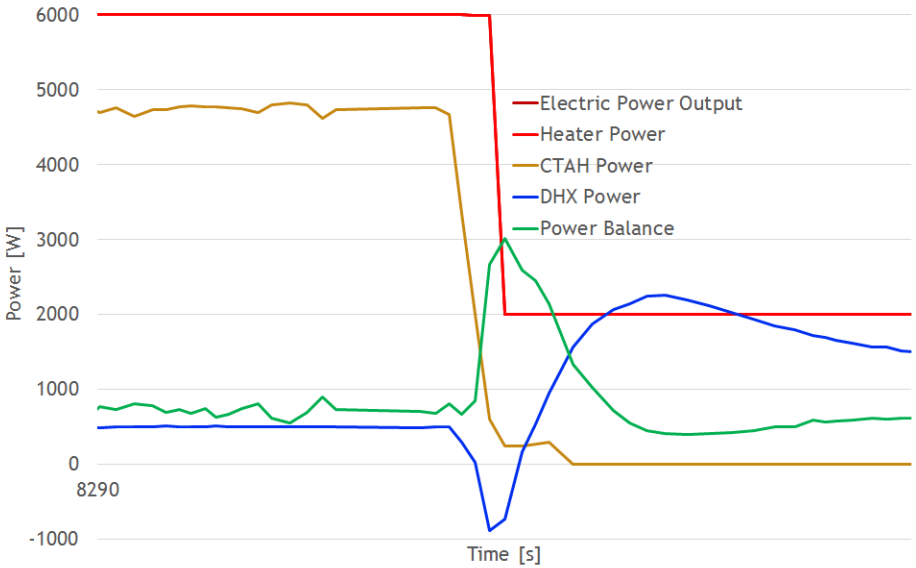

- Test Scenario: Initial pump trip, followed by power reduction from 6 kW to 2 kW and isolation of CTAH loop
- Results show the flow reversal in the DHX and the transition to steady state natural circulation

CONCLUSIONS AND FUTURE WORK

Conclusions

- **The CIET facility was designed, fabricated, filled with Dowtherm A oil, and is now fully operational with extensive instrumentation and automated controls**

- **Friction losses in the facility were characterized and CIET-specific friction loss correlations were implemented in system codes that are to be validated by data from CIET**

- **Initial systems code validation effort with RELAP-3D and FANCY show excellent agreement with experimental data for steady state natural circulation and forced circulation transient tests with heat input step changes**

Future Work

- Complete initial test plan with thermal transient results for protected LOFC and LOHS scenarios
- Facility upgrades
  - Complete installation of guard heating system to reduce parasitic heat losses from the loop
  - I&C upgrade to incorporate simulated reactivity feedback
- Loop modifications for better scaling to the Mk1 PB-FHR
  - Test alternative heat exchanger designs, including twisted tube
  - Replace heater to more closely match core friction losses and fluid residence times
- Scaling analysis and transient tests to better characterize the thermal response of reactor structural materials
- Ongoing support for benchmarking effort under DOE Integrated Research Project (IRP)

QUESTIONS?

www.fhr.nuc.berkeley.edu
laufer@berkeley.edu

BACKUP SLIDES

The Scaled High Temperature Heat Transfer Experiment (S-HT^2) Provided the First Evidence of Similitude for Forced Convection

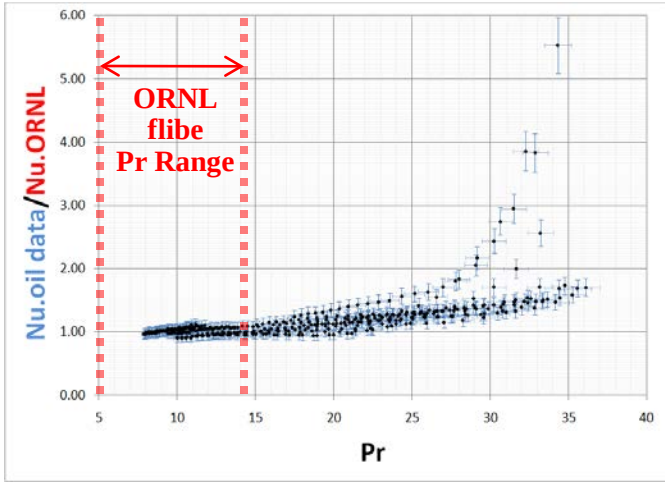

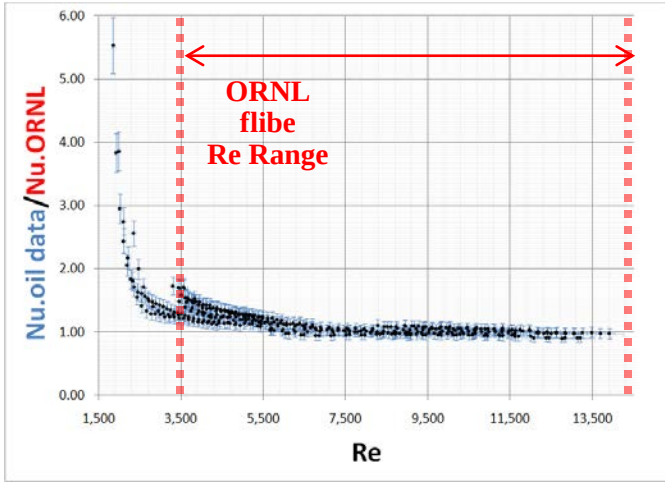

Turbulent Flow Correlations

ORNL FLiBe Correlation
4 < Pr < 14

$$Nu_{Tr,OR} = 0.107\left(Re^{\frac{2}{3}} - 135\right) Pr^{1/3}\left(\frac{\mu}{\mu_w}\right)^{0.14} \quad for\ 3\,500 < Re < 12\,000$$

$$Nu_{T,OR} = 0.0234\, Re^{0.8}\, Pr^{1/3}\left(\frac{\mu}{\mu_w}\right)^{0.14} \quad for\ Re > 12\,000$$

S-HT^2 Correlation
8 < Pr < 36

$$Nu_T = 0.015\,(Re^{0.85} + 138) Pr^{1/3}\left(\frac{\mu}{\mu_w}\right)^{0.11} \quad for\ 3\,400 < Re < 14\,000,\ 1.4 < \frac{\mu}{\mu_w} < 3.1$$

Cooke J.W., Cox B. "Forced Convection Heat Transfer Measurements with a Molten Fluoride Salt Mixture Flowing in a Smooth Tube." March 1973. Oakridge National Laboratory. ORNL-TM-4079.

Design Considerations - Heater

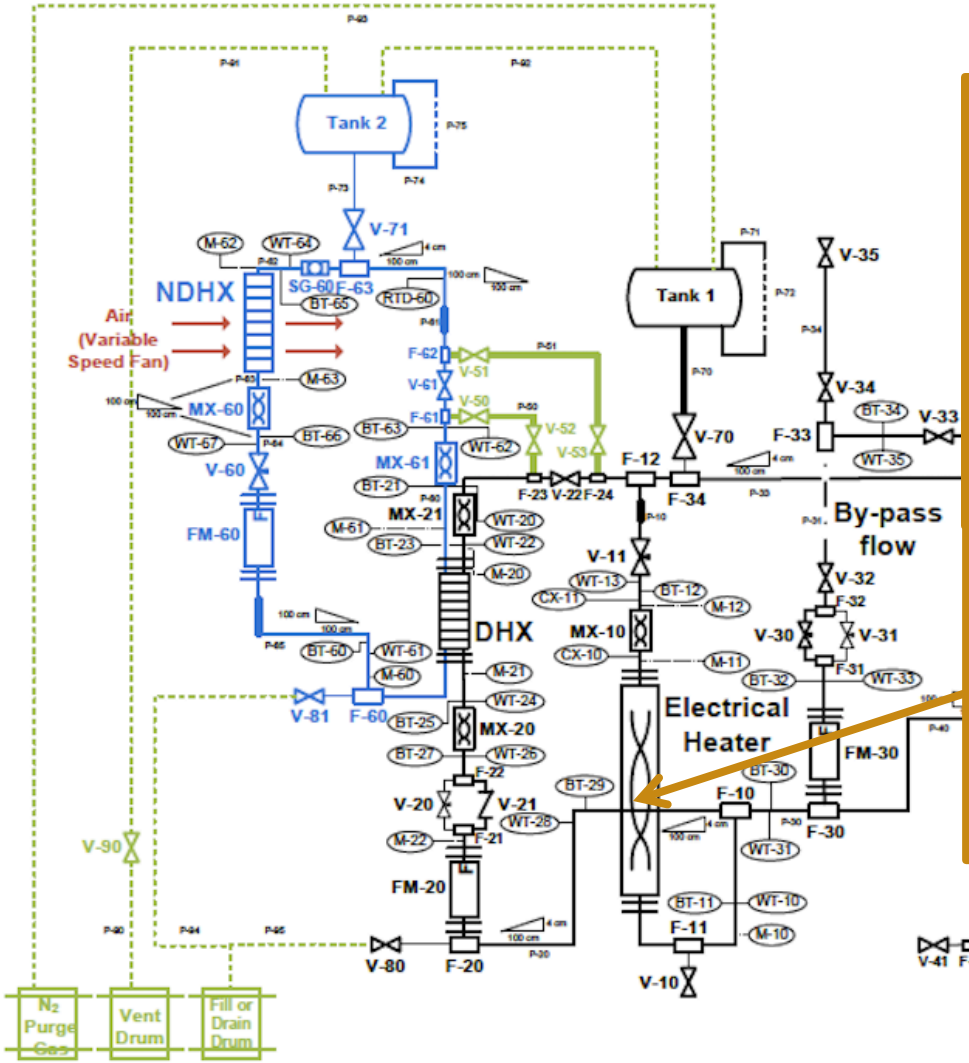

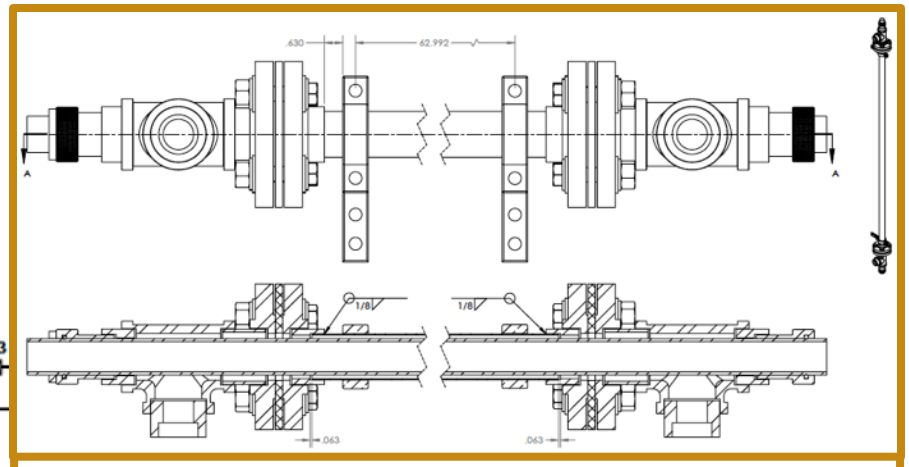

- Electrically heated annular tube
- Computer-controlled power supply (up to 10 kW)
- Time-dependent power profiles to simulate reactor scram and decay heat generation in the FHR core

Design Considerations – Air-Cooled Heat Exchangers

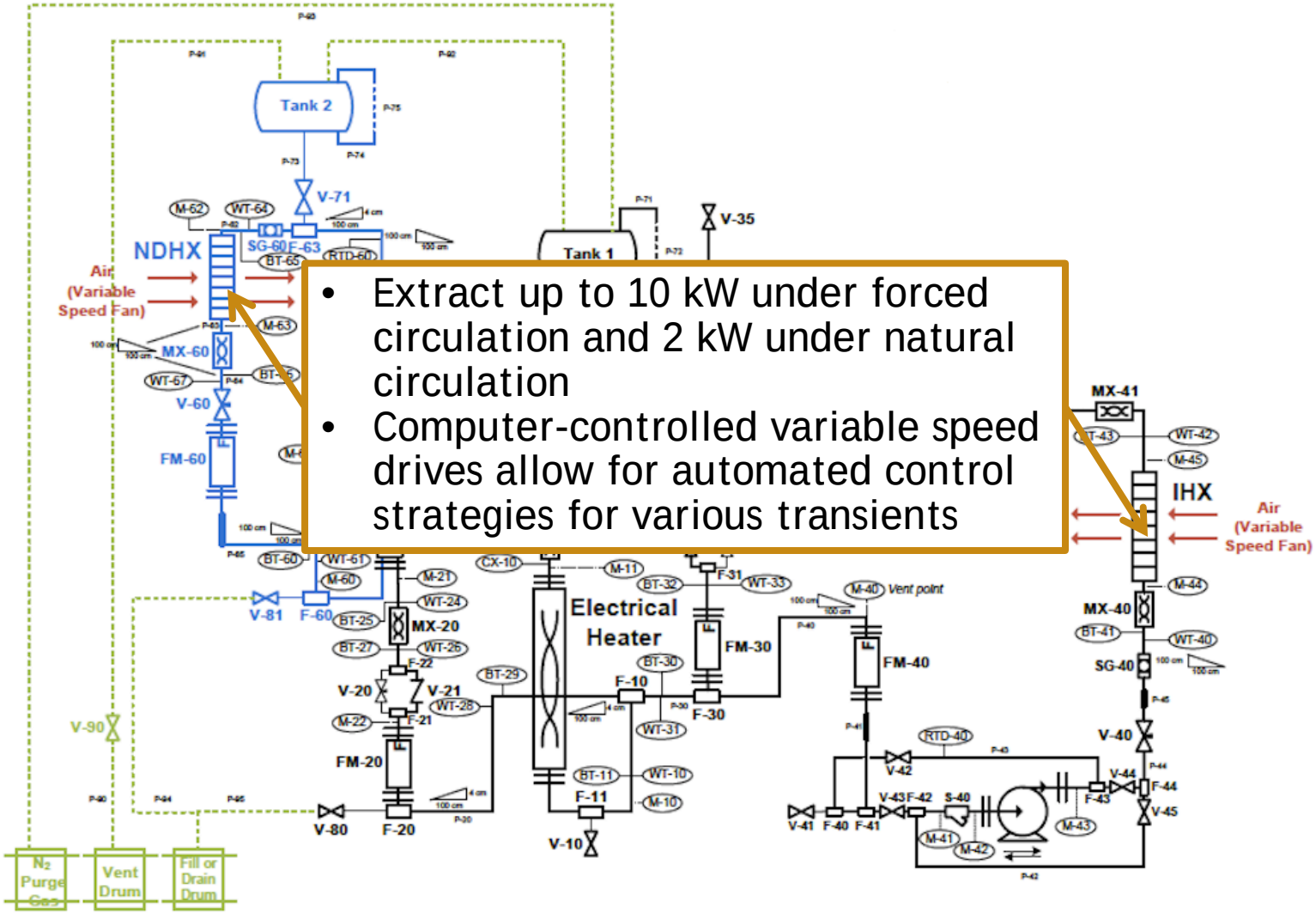

- Extract up to 10 kW under forced circulation and 2 kW under natural circulation
- Computer-controlled variable speed drives allow for automated control strategies for various transients

Design Considerations - DHX

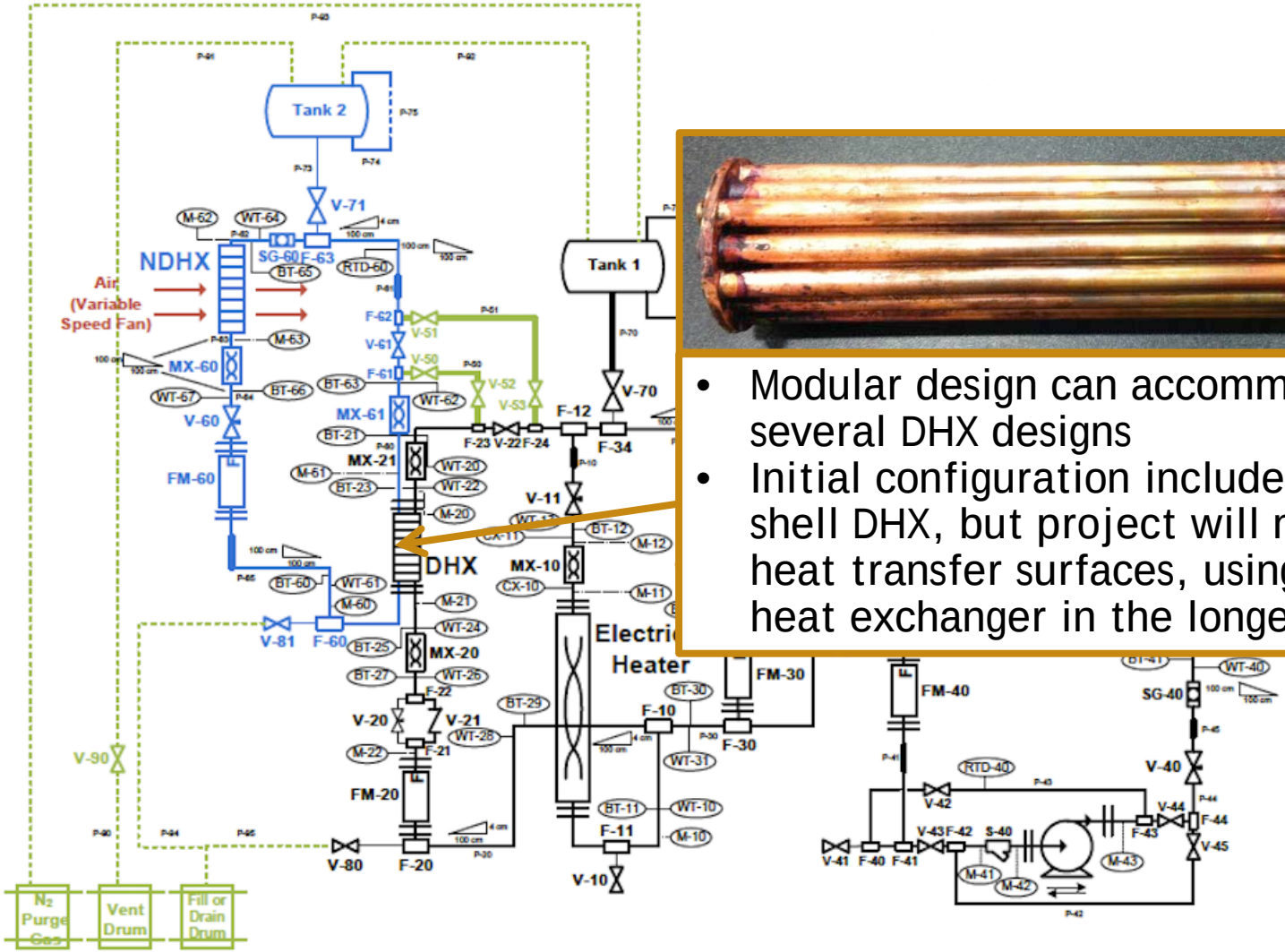

- Modular design can accommodate testing of several DHX designs
- Initial configuration includes a baffled tube-in-shell DHX, but project will move to enhanced heat transfer surfaces, using a twisted tube heat exchanger in the longer term

Design Considerations – "Fluidic Diode"

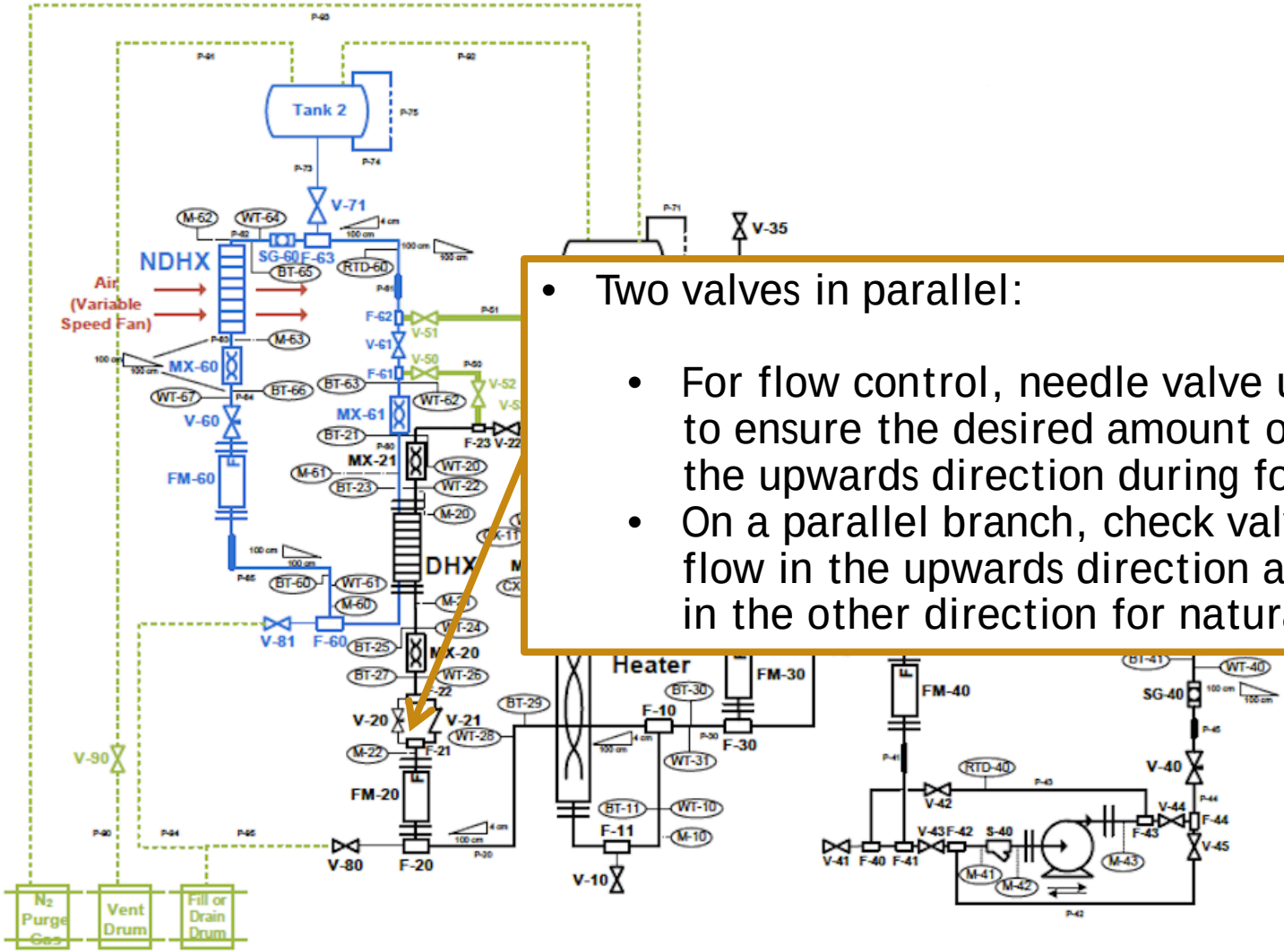

- Two valves in parallel:
  - For flow control, needle valve used in one branch to ensure the desired amount of by-pass flow in the upwards direction during forced circulation
  - On a parallel branch, check valve used to block flow in the upwards direction and allow free flow in the other direction for natural circulation

Design Considerations – Core By-pass Line

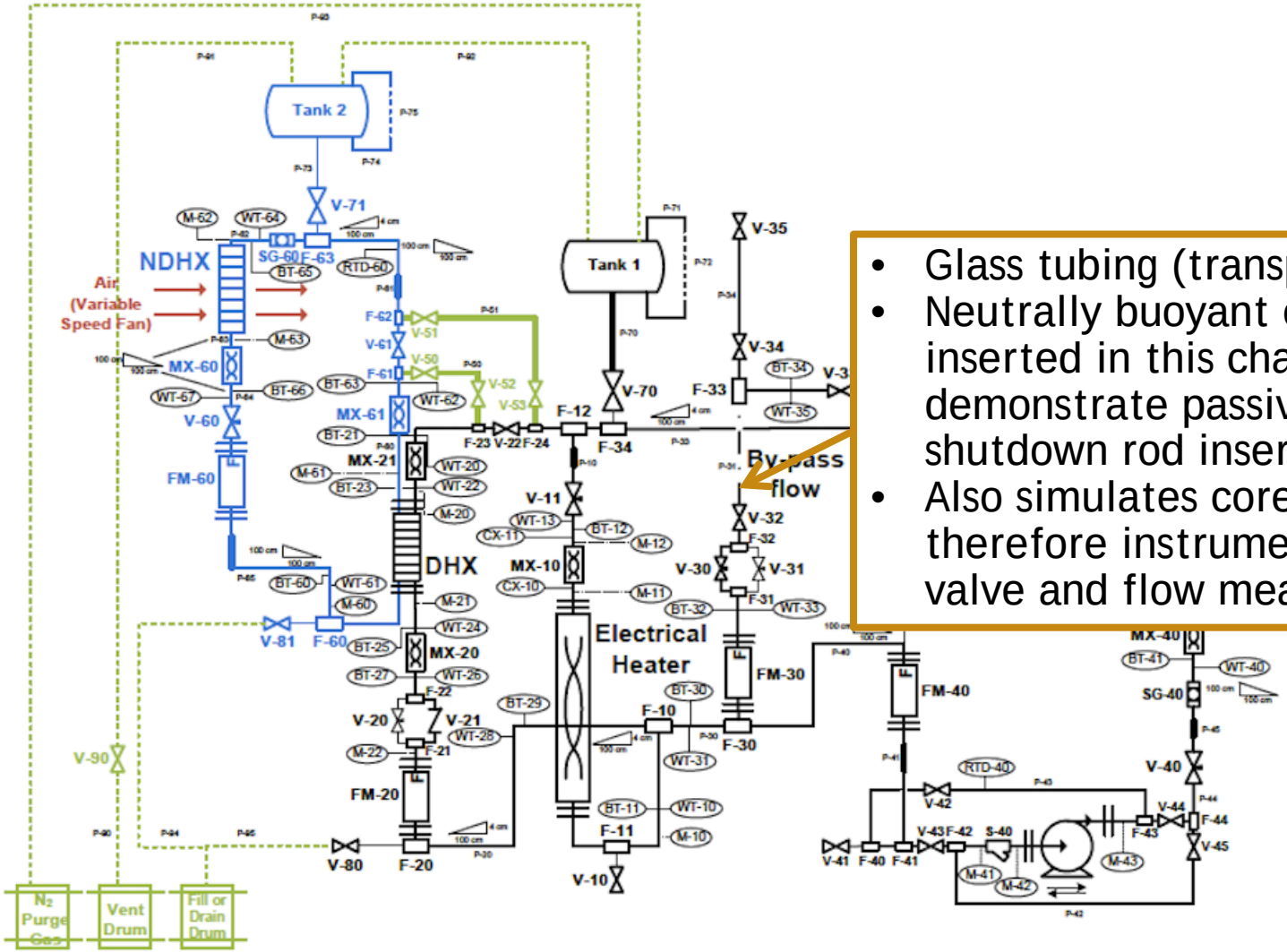

- Glass tubing (transparent)
- Neutrally buoyant element can be inserted in this channel to demonstrate passive, buoyancy-driven shutdown rod insertion capability
- Also simulates core by-pass flow, therefore instrumented with a control valve and flow measurement

Design Considerations – Centrifugal Pump

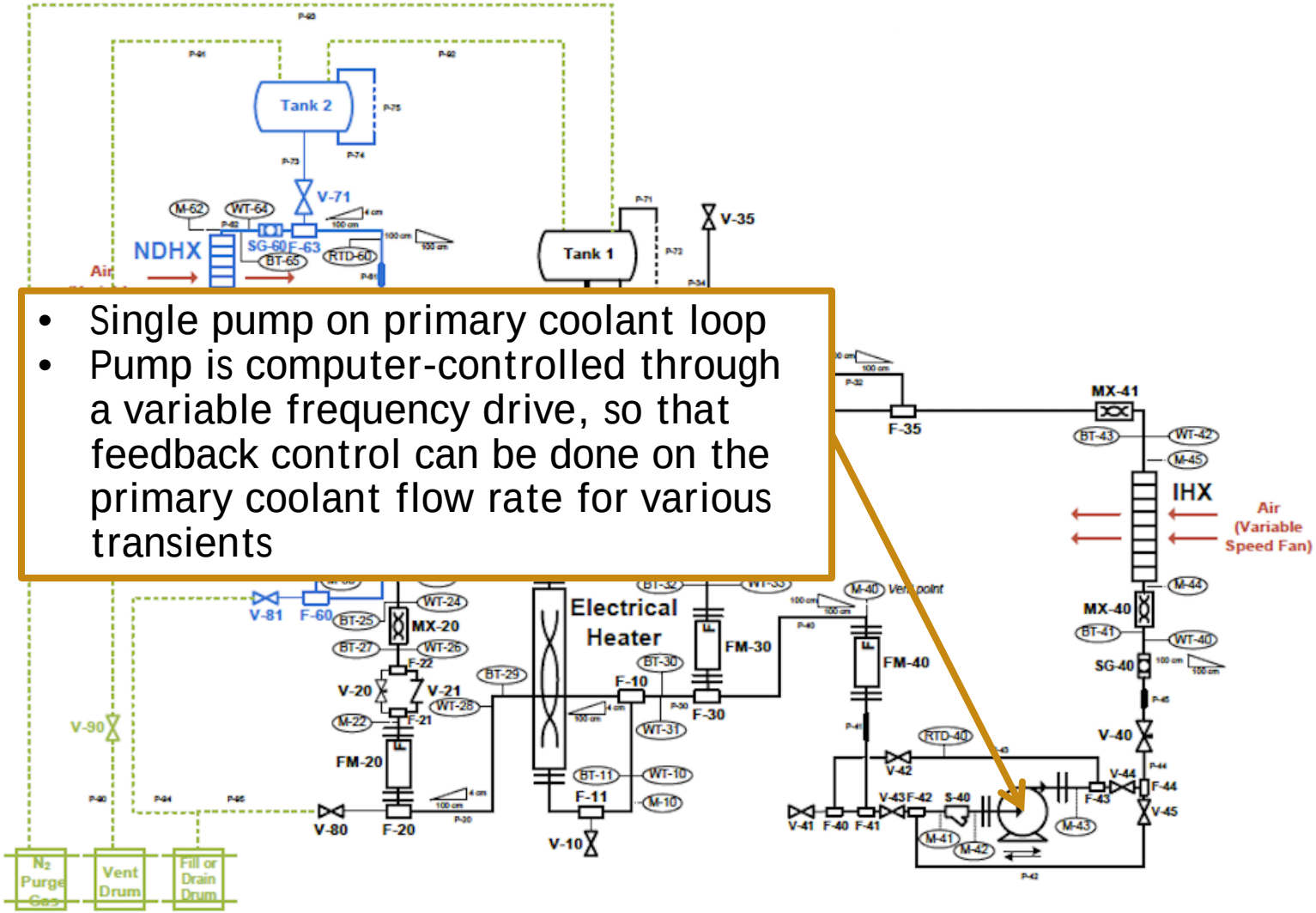

- Single pump on primary coolant loop
- Pump is computer-controlled through a variable frequency drive, so that feedback control can be done on the primary coolant flow rate for various transients

Design Considerations - Others

- **Instrumentation:**
  - In-line thermocouples with static mixers
  - RTD probes for on-line calibration
  - Manometer lines for pressure readings (low pressure)
  - Coriolis flow meters for dynamic flow rate measurements
- **Thermal insulation:**
  - Pipe fiberglass insulation
  - Heated enclosure for guard heating
- **Sight glasses for gas entrainment monitoring**
  - Vents at every local high point
  - Sloped lines for gas venting

September 15, 2014 - Loop Fill-Up

Oil Levels Monitored throughout the Process

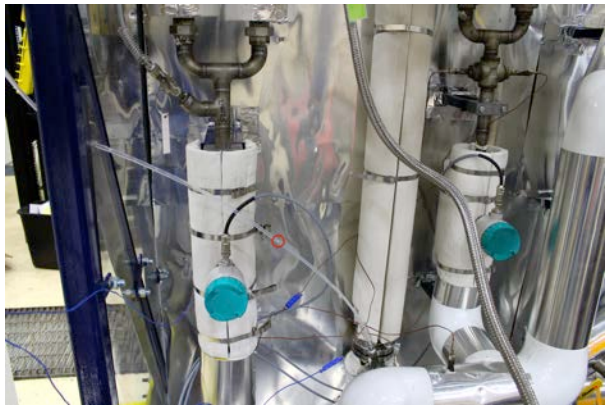

Manometer Line M-10

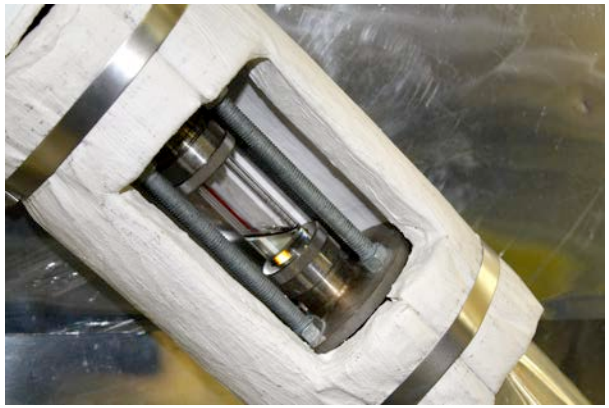

Primary Sight Glass

Primary Head Tank

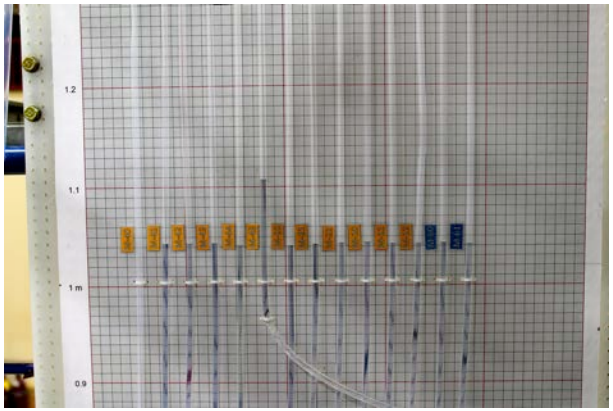

Primary Loop Levels

Using Infrared Camera to Identify Major Sources of Heat Losses and Enhance Insulation

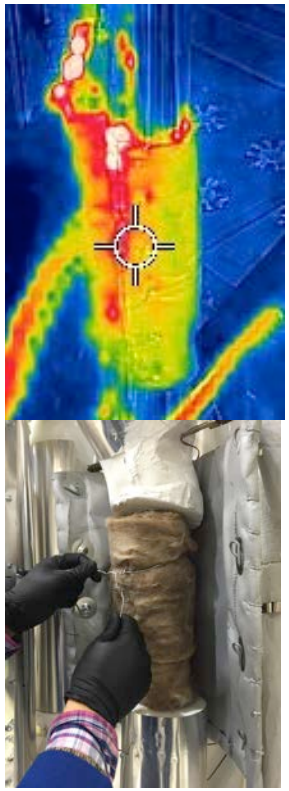

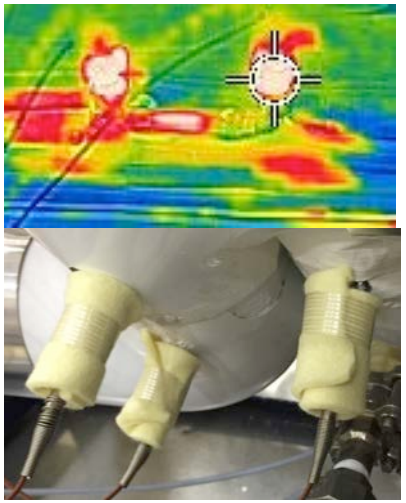

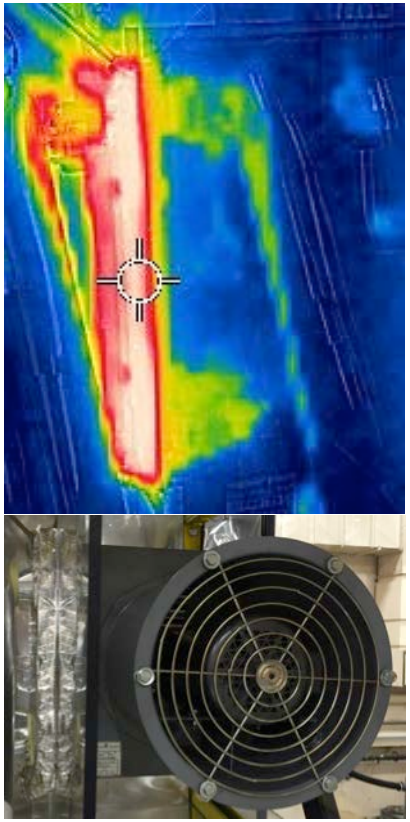

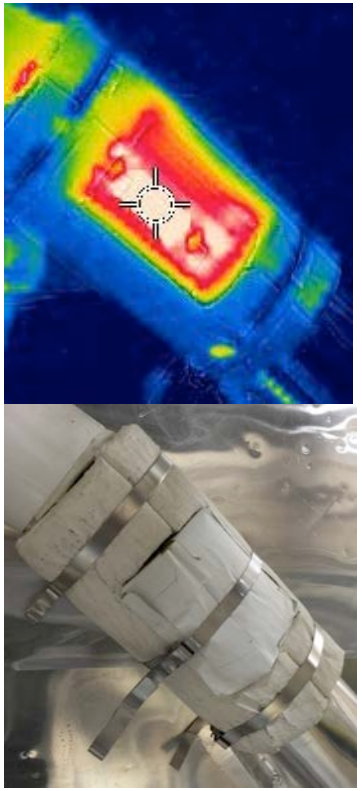

- New tests must be run to compare new heat losses with previous results
- Pump suction, impeller and discharge remain to be insulated
- Heat losses will be further reduced with guard heating

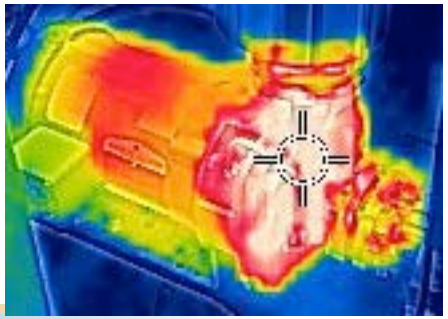

The CIET Facility and Corresponding Nodalization Diagram

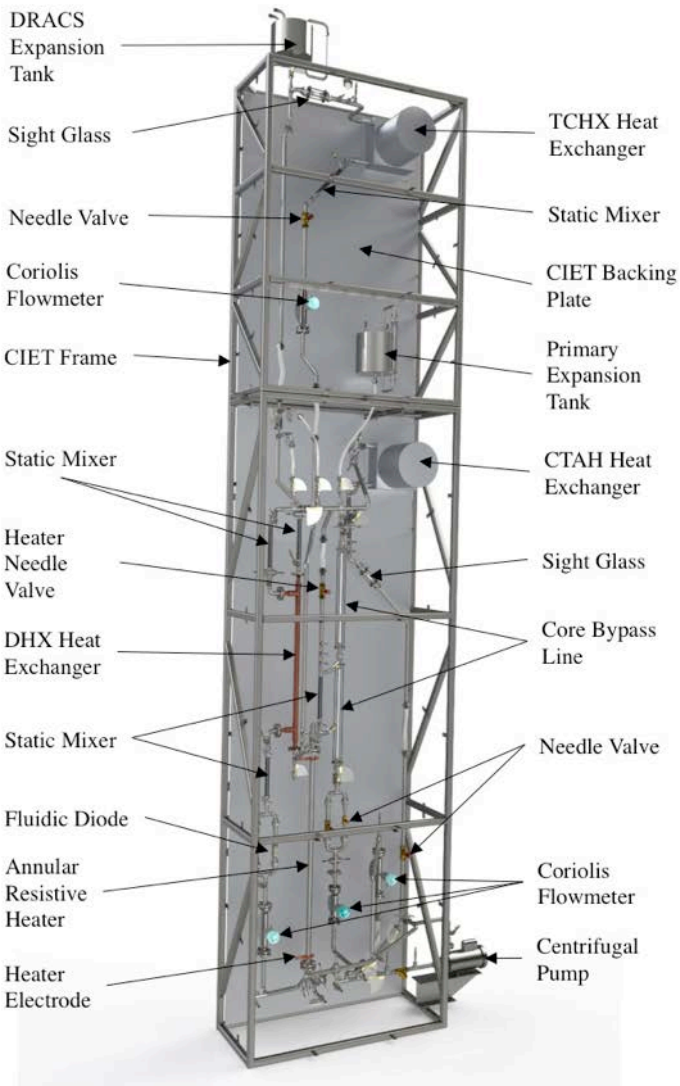

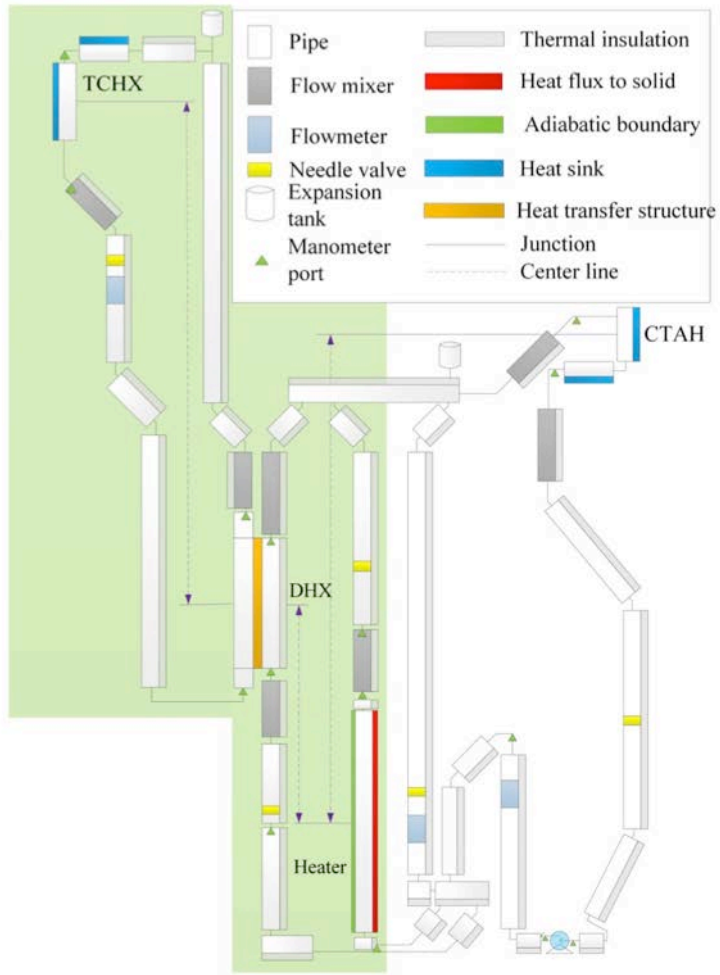

Model Validation – Common Nodalization

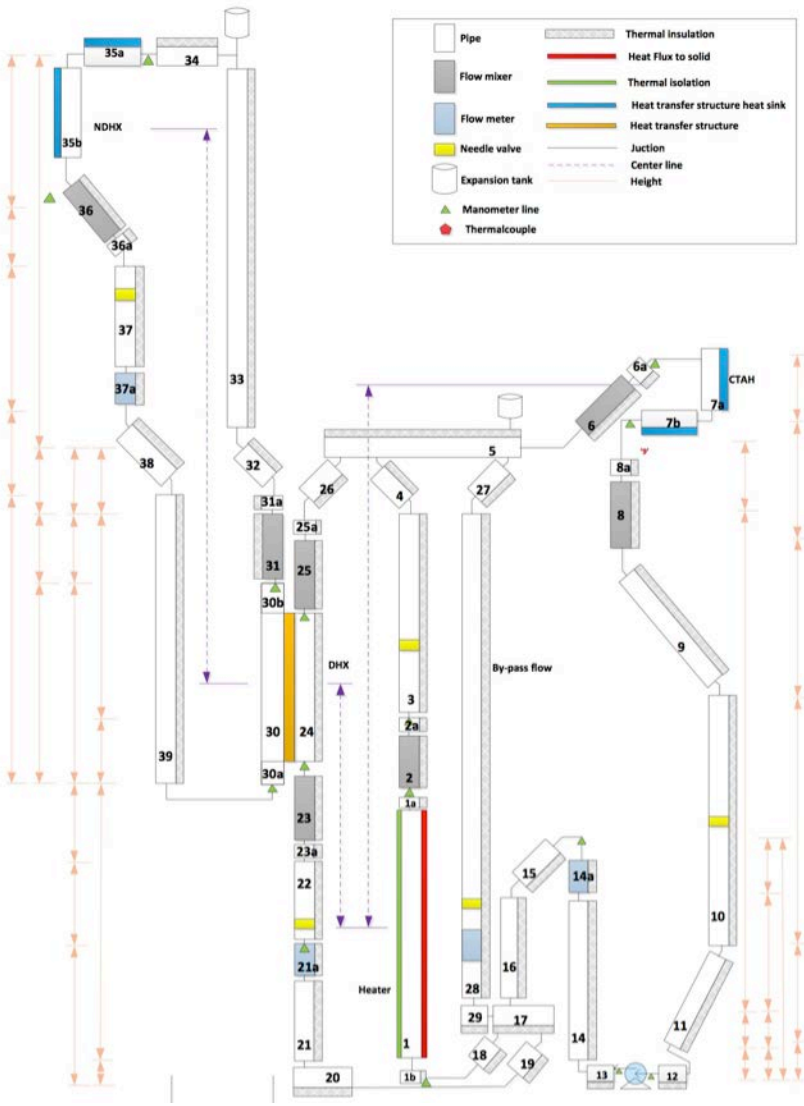

Shared parameters:

- Geometry
  - Lengths
  - Elevations
  - Hydraulic diameters
  - Flow areas
- Nodalization
  - Hydrodynamic components
  - Heat structures
- Form losses
  - From the literature for standard components (elbows, tees, etc.)
  - Empirical correlations for mixers, flowmeters, heat exchangers, etc.
- Boundary conditions:
  - Power input
  - Ambient temperatures
  - Heat transfer coefficients for heat exchangers

Comparison of Experimental, RELAP5-3D, FANCY and Analytical Natural Circulation Mass Flow Rates

- For single-phase natural circulation loops with no parasitic heat losses, mass flow rates are derived from fluid average thermophysical properties and loop geometry:

$$\dot{m}^3 = \frac{2\rho_{av}{}^2 g\beta_{av}}{c_{p,av}} \cdot \frac{\Delta z_{NC} Q_h}{F'}$$

$$F' = \sum_{i=1}^{N} \left(\frac{1}{A_i{}^2} \cdot \frac{L_i}{D_i} \right) f_i$$

$$Re_i = \frac{1}{\mu_i} \dot{m} \frac{D_i}{A_i}$$

$$f = 64/\mathrm{Re}$$

using the analytical correlation for laminar flow friction factor in straight, cylindrical pipes (valid here – friction losses make up 98% of total losses in the loop)